ISSUED: December 21, 2007
BY: Vice President
Lexington, Kentucky

EFFECTIVE: December 21, 2007

ACCESS SERVICE

Regulations, Rates and Charges
applying to the provision of Access Services
for connection to communications facilities
for customers within the operating territories
of the Company

Access Services are provided by means of wire, fiber optics, radio or any other suitable technology or a combination thereof.

(D)

(D)

Whenever in this Tariff the name Windstream Kentucky East, Inc. - London, Windstream Kentucky East - London or the term (N)
Telephone Company appears, that reference shall be deemed to refer to Windstream Kentucky East, LLC - London. (N)

TARIFF BRANCH
RECEIVED
12/21/2007
PUBLIC SERVICE
COMMISSION
OF KENTUCKY

ISSUED: JULY 17, 2006
BY: Vice President
Lexington, Kentucky

EFFECTIVE: AUGUST 1, 2006

ACCESS SERVICE

TABLE OF CONTENTS

		Page No.
1.	APPLICATION OF TARIFF	1
2.	GENERAL REGULATIONS	1
2.1	Undertaking of the Company	1
2.1.1	Scope	1
2.1.2	Limitations	1
2.1.3	Liability	3
2.1.4	Provision of Services	5
2.1.5	Installation and Termination of Services	5
2.1.6	Maintenance of Services	5
2.1.7	Changes, Substitutions and Rearrangements	6
2.1.8	Refusal and Discontinuance of Service	7
2.1.9	Limitation of Use of Metallic Facilities	9
2.1.10	Notification of Service-Affecting Activities	9
2.1.11	Coordination with Respect to Network Contingencies	9
2.1.12	Provision and Ownership of Telephone Numbers	9
2.2	Use	10
2.2.1	Interference or Impairment	10
2.2.2	Unlawful Use	10
2.3	Obligations of the Customers	11
2.3.1	Damages	11
2.3.2	Ownership of Facilities and Theft	11
2.2.3	Equipment Space and Power	11
2.3.4	Availability for Testing	12
2.3.5	Balance	12
2.3.6	Design of Customer Services	12
2.3.7	References to the Company	12
2.3.8	Claims and Demands for Damages	12
2.3.9	Coordination with Respect to Network Contingencies	13
2.3.10	Sectionalization and Trouble Reporting	13

TARIFF BRANCH
RECEIVED
7/17/2006
PUBLIC SERVICE
COMMISSION
OF KENTUCKY

ISSUED: JULY 17, 2006
BY: Vice President
Lexington, Kentucky

EFFECTIVE: AUGUST 1, 2006

ACCESS SERVICE

TABLE OF CONTENTS (Cont'd)

2.	GENERAL REGULATIONS (Cont'd)	Page No.
2.4	Payment Arrangements and Credit Allowances	14
2.4.1	Payment of Rates, Charges and Deposits	14
2.4.2	Minimum Periods	20
2.4.3	Cancellation of an Order for Service	20
2.4.4	Credit Allowance for Service Interruption	21
2.4.5	Re-establishment of Service Following Fire, Flood or Other Occurrence	26
2.4.6	Title or Ownership Rights	26
2.4.7	Access Services Provided by More Than One Telephone Company	27
2.5	Connections	33
2.6	Definitions	33
	Access Area	33
	Access Code	33
	Access Minutes	33
	Access Tandem	34
	Access Tandem Network	34
	Agent	34
	Answer Message	34
	Answer/Disconnect Supervision	34
	Attenuation Distortion	34
	Balance (100 Type) Test Line	34
	Bit	35
	Business Day	35
	Busy Hour Minutes of Capacity (BHMC)	35
	Call	35
	Carrier or Common Carrier	35
	CCS	35
	Central Office	36
	Central Office Prefix	36
	Centralized Automatic Reporting on Trunks Testing	36
	Circuit(s)	36
	Channel Service Unit	36
	Channelize	36
	C-Message Noise	37
	C-Notched Noise	37

TARIFF BRANCH
RECEIVED
7/17/2006
PUBLIC SERVICE
COMMISSION
OF KENTUCKY

ISSUED: JULY 17, 2006
BY: Vice President
Lexington, Kentucky

EFFECTIVE: AUGUST 1, 2006

ACCESS SERVICE

TABLE OF CONTENTS (Cont'd)

2. GENERAL REGULATIONS (Cont'd) Page No.

2.6 Definitions (Cont'd)

Coin Station	37
Common Channel Signaling System 7 Network	37
Common Line	37
Communications System	37
Customer(s)	38
Data Transmission (107 Type) Test Line	38
Decibel	38
Decibel Reference Noise C-Message Weighting	38
Decibel Reference Noise C-Message Referenced to 0	38
Dual Tone Multifrequency Address Signaling	38
Echo Control	39
Echo Path Loss	39
Echo Return Loss	39
Effective 2-Wire	39
Effective 4-Wire	39
End Office Switch	40
End User	40
Entry Switch	40
Envelope Delay Distortion	40
Equal Level Echo Path Loss	40
Exchange	40
Exit Message	41
Expected Measured Loss	41
Extended Area Service	41
Field Identifier	41
First Come - First Served	41
First Point of Switching	41
Frequency Shift	42
Grandfathered	42
Host Office	42
Immediately Available Funds	42
Impedance Balance	42
Impulse Noise	42
Individual Case Basis	43
Initial Address Message (IAM)	43
Inserted Connection Loss	43
Interexchange Carrier (IC) or Interexchange Common Carrier	43

TARIFF BRANCH
RECEIVED
7/17/2006
PUBLIC SERVICE COMMISSION OF KENTUCKY

ISSUED: JULY 17, 2006
BY: Vice President
Lexington, Kentucky

EFFECTIVE: AUGUST 1, 2006

ACCESS SERVICE

TABLE OF CONTENTS (Cont'd)

2. GENERAL REGULATIONS (Cont'd) Page No.

2.6 Definitions (Cont'd)

Intermodulation Distortion	43
Interstate Communications	43
Intrastate Communications	43
Line Side Connection	44
Local Access and Transport Area	44
Location Provider	44
Loop Around Test Line	44
Loss Deviation	44
Message	44
Milliwatt (102 Type) Test Line	44
Network Control Signaling	45
Nonsynchronous Test Line	45
North American Numbering Plan	45
Off-hook	45
On-hook	45
Open Circuit Test Line	45
Originating Direction	46
Pay Telephone	46
Phase Jitter	46
Point of Termination	46
Premises	46
Release Message	46
Remote Switching Modules and/or Remote Switching Systems	46
Return Loss	46
Registered Equipment	47
Serving Wire Center	47
Seven Digit Manual Test Line	47
Shortage of Facilities or Equipment	47
Short Circuit Test Line	47
Signal-To-C-Notched Noise Ratio	47
Signaling System 7	47
Signal Transport Point (STP)	47
Signal Transport Point (STP) Port	48
Singing Return Loss	48
Subtending End Office of Access Tandem	48
Synchronous Test Line	48
Terminating Direction	48

TARIFF BRANCH
RECEIVED
7/17/2006
PUBLIC SERVICE
COMMISSION
OF KENTUCKY

ISSUED: JULY 17, 2006
BY: Vice President
Lexington, Kentucky

EFFECTIVE: AUGUST 1, 2006

ACCESS SERVICE

TABLE OF CONTENTS (Cont'd)

		Page No.
2.	GENERAL REGULATIONS (Cont'd)	
2.6	Definitions (Cont'd)	
	Transmission Measuring (105 Type) Test Line/Responder	48
	Transmission Path	48
	Trunk	48
	Trunk Group	48
	Trunk Side Connection	49
	Two-Wire to Four-Wire Conversion	49
	Uniform Service Order Code	49
	V & H Coordinates	49
	WATS Serving Office	49
	Wire Center	49

TARIFF BRANCH
RECEIVED
7/17/2006
PUBLIC SERVICE
COMMISSION
OF KENTUCKY

ISSUED: JULY 17, 2006
BY: Vice President
Lexington, Kentucky

EFFECTIVE: AUGUST 1, 2006

ACCESS SERVICE

TABLE OF CONTENTS (Cont'd)

		Page No.
3.	CARRIER COMMON LINE ACCESS SERVICE	1
3.1	General Description	1
3.2	Limitations	2
3.3	Undertaking of the Telephone Company	3
3.4	Obligation of the Customer	4
3.5	Payment Arrangements	6
3.6	Payment of Coin Sent-Paid Monies	7
3.6.1	Bill Period Coin Revenue	7
3.6.2	Total IC Coin Revenue	7
3.6.3	Recourse Adjustments	7
3.6.4	Payment of Net IC Coin Revenue	8
3.6.5	Audit Provisions	8
3.7	Rate Regulations	9
3.8	Rates and Charges	12

TARIFF BRANCH
RECEIVED
7/17/2006
PUBLIC SERVICE
COMMISSION
OF KENTUCKY

ISSUED: JULY 17, 2006
BY: Vice President
Lexington, Kentucky

EFFECTIVE: AUGUST 1, 2006

ACCESS SERVICE

TABLE OF CONTENTS (Cont'd)

		Page No.
4.	END USER ACCESS SERVICE	1
4.1	General Description	1
4.2	Limitations	1
4.3	Undertaking of the Company	1
4.4	Obligations of Radio Common Carriers	1
4.5	Payment Arrangements and Credit Allowances	2
4.5.1	Minimum Period	2
4.5.2	Cancellation of Orders	2
4.5.3	Changes to Orders	2
4.5.4	Allowance for Interruptions	2
4.5.5	Temporary Suspension of Service	2
4.6	Rate Regulations	3
4.6.1	Who is Billed	3
4.6.2	Multiparty Service	3
4.6.3	Semi-Public Service	3
4.6.4	Business Services	3
4.6.5	Radio Common Carriers	5
4.6.6	Remote Call Forwarding	5
4.6.7	Residence Services	6
4.7	Rates and Charges	7
4.7.1	End User Common Line Residence	7
4.7.2	End User Common Line Single Line Business	7
4.7.3	End User Common Line Centrex Dormitory Service	7
4.7.4	End User Common Line Multiline Business including Centrex CO	7

TARIFF BRANCH
RECEIVED
7/17/2006
PUBLIC SERVICE
COMMISSION
OF KENTUCKY

ISSUED: JULY 17, 2006
BY: Vice President
Lexington, Kentucky

EFFECTIVE: AUGUST 1, 2006

ACCESS SERVICE

TABLE OF CONTENTS (Cont'd)

		Page No.
5.	ORDERING SWITCHED AND SPECIAL ACCESS SERVICE	1
5.1	Access Service Request Requirements	1
5.1.1	General	1
5.1.2	Switched Access Ordering Requirements	2
5.1.3	Special Access Services	8
5.1.4	Switched Access Interface	8
5.1.5	Equal Access Conversions	9
5.1.6	Provision of Other Services	10
5.1.7	Access Order Service Date Intervals	10
5.1.8	Selection of Facilities for Access Order	11
5.1.9	Shared Use Facilities	11
5.2	Access Services Provided by More Than One Company	12
5.3	Access Order Charges	14
5.3.1	Access Service Request Modifications	14
5.3.2	Cancellation of an Access Service Request	17
5.3.3	Minimum Period Charges	19
6.	SWITCHED ACCESS SERVICE	1
6.1	General	1
6.1.1	Service Arrangements	1
6.1.2	Technical Specifications	2
6.1.3	Optional Features	2
6.2	Switched Access Service Arrangements	3
6.2.1	Feature Group A	4
6.2.2	Feature Group B	10
6.2.3	Feature Group C	14
6.2.4	Feature Group D	18
6.2.5	(Reserved for Future Use)	21
6.2.6	(Reserved for Future Use)	21
6.2.7	(Reserved for Future Use)	22
6.2.8	(Reserved for Future Use)	23
6.2.9	(Reserved for Future Use)	24
6.2.10	800/877/888 Access Service	29
6.2.11	900 Access Service	33
6.2.12	(Reserved for Future Use)	33
6.2.13	500 Access Service	33
6.2.14	(Reserved for Future Use)	35

TARIFF BRANCH
RECEIVED
7/17/2006
PUBLIC SERVICE
COMMISSION
OF KENTUCKY

ISSUED: JULY 17, 2006
BY: Vice President
Lexington, Kentucky

EFFECTIVE: AUGUST 1, 2006

ACCESS SERVICE

TABLE OF CONTENTS (Cont'd)

		Page No.
6.	SWITCHED ACCESS SERVICE (Cont'd)	
6.3	Optional Features	36
6.3.1	Local Transport Optional Features	36
6.3.2	Common Switching Optional Features	37
6.3.3	Transport Termination Optional Features	56
6.4	Provision of Switched Access Service	59
(A)	Network Management	59
(B)	Design and Traffic Routing of Switched Access Service	59
(C)	Access Tandem Arrangements	60
(D)	Determination of Number of Transmission Paths and Terminations	61
(E)	Transmission Specifications	61
(F)	Design Layout Report	62
(G)	Testing	62
(H)	Trunk Group Measurement Reports	66
(I)	Service Performance Data	66
(J)	Equal Access Conversions	66
(K)	Design Blocking Probability	67
6.5	Rate Categories, Applications, and Regulations	70
6.5.1	Rate Categories	70
6.5.2	Local Transport	71
6.5.3	End Office	79
6.5.4	Nonrecurring Charges	81
6.5.5	Determination of Access Minutes	85
6.5.6	Reserved for Future Use	100
6.5.7	Minimum Periods and Charges	100
6.5.8	Application of Rates for FGA Extension Service	101
6.5.9	Application of Rates for Extended FGA Terminating Service	102
6.5.10	Network Blocking Charge for Feature Group D	103
6.5.11	Shared Use Facilities	104
6.5.12	Carrier Identification Parameter (CIP)	104
6.5.13	(Reserved for Future Use)	104
6.5.14	(Reserved for Future Use)	104
6.5.15	(Reserved for Future Use)	105
6.6	Switched Access Rates and Charges	106

TARIFF BRANCH
RECEIVED
7/17/2006
PUBLIC SERVICE
COMMISSION
OF KENTUCKY

ISSUED: JULY 17, 2006
BY: Vice President
Lexington, Kentucky

EFFECTIVE: AUGUST 1, 2006

ACCESS SERVICE

TABLE OF CONTENTS (Cont'd)

		Page No.
7.	SWITCHED ACCESS SERVICE	1
7.1	Provision of Switched Access Service	1
7.1.1	Circuit Types	1
7.1.2	Service Configurations	3
7.1.3	Technical Specifications Packages	6
7.1.4	Channel Interfaces	7
7.1.5	Alternate Use	7
7.1.6	Special Facilities Routing	8
7.1.7	Design Layout Report	8
7.1.8	Acceptance Testing	8
7.1.9	Jurisdictional Determination	9
7.2	Rate Categories, Applications, and Regulations	10
7.2.1	Rate Categories	10
7.2.2	Minimum Periods	20
7.2.3	Application of Daily and Monthly Rates	20
7.2.4	Facility Hubs and Multiplexing	21
7.2.5	Shared Use Analog and Digital High Capacity Services	23
7.3	Metallic Service	24
7.3.1	Basic Circuit Description	24
7.3.2	Technical Specifications Packages	24
7.3.3	Channel Interfaces	24
7.3.4	Optional Features and Functions	24
7.3.5	Rates and Charges	25
7.4	Telegraph Grade Service	26
7.4.1	Basic Service Description	26
7.4.2	Technical Specifications Packages	26
7.4.3	Channel Interfaces	26
7.4.4	Optional Features and Functions	26
7.4.5	Rates and Charges	27

TARIFF BRANCH
RECEIVED
7/17/2006
PUBLIC SERVICE
COMMISSION
OF KENTUCKY

ISSUED: JULY 17, 2006
BY: Vice President
Lexington, Kentucky

EFFECTIVE: AUGUST 1, 2006

ACCESS SERVICE

TABLE OF CONTENTS (Cont'd)

		Page No.
7.	SWITCHED ACCESS SERVICE (Cont'd)	
7.5	Voice Grade Service	28
7.5.1	Basic Circuit Description	28
7.5.2	Technical Specifications Packages	29
7.5.3	Channel Interfaces	30
7.5.4	Optional Features and Functions	30
7.5.5	Rates and Charges	36
7.6	Program Audio Service	41
7.6.1	Basic Circuit Description	41
7.6.2	Technical Specifications Packages	41
7.6.3	Channel Interfaces	42
7.6.4	Optional Features and Functions	42
7.6.5	Rates and Charges	43
7.7	Video Service	45
7.7.1	Basic Circuit Description	45
7.7.2	Technical Specifications Packages	45
7.7.3	Channel Interfaces	46
7.7.4	Rates and Charges	48
7.8	Wideband Analog Service	50
7.8.1	Basic Circuit Description	50
7.8.2	Technical Specifications Packages	50
7.8.3	Channel Interfaces	51
7.8.4	Optional Features and Functions	51
7.8.5	Rates and Charges	53
7.9	Wideband Data Service	56
7.9.1	Basic Circuit Description	56
7.9.2	Technical Specifications Packages	56
7.9.3	Channel Interfaces	56
7.9.4	Optional Features and Functions	57
7.9.5	Rates and Charges	58

TARIFF BRANCH
RECEIVED
7/17/2006
PUBLIC SERVICE
COMMISSION
OF KENTUCKY

ISSUED: JULY 17, 2006
BY: Vice President
Lexington, Kentucky

EFFECTIVE: AUGUST 1, 2006

ACCESS SERVICE

TABLE OF CONTENTS (Cont'd)

		Page No.
7.	SWITCHED ACCESS SERVICE (Cont'd)	
7.10	Digital Data Service	60
7.10.1	Basic Circuit Description	60
7.10.2	Technical Specifications Packages	60
7.10.3	Channel Interfaces	61
7.10.4	Optional Features and Functions	61
7.10.5	Rates and Charges	62
7.11	High Capacity Service	64
7.11.1	Basic Circuit Description	64
7.11.2	Technical Specifications Packages	64
7.11.3	Channel Interfaces	65
7.11.4	Optional Features and Functions	65
7.11.5	Rates and Charges	68
7.12	Individual Case Filing	71
8.	MISCELLANEOUS SERVICES	1
8.1	Additional Engineering	1
8.11	Charges for Additional Engineering	2
8.2	Additional Labor	3
8.2.1	Overtime Installation	3
8.2.2	Overtime Repair	3
8.2.3	Stand By	3
8.2.4	Maintenance with other Telephone Companies	3
8.2.5	Other Labor	3
8.2.6	Charges for Additional Labor	4
8.3	Maintenance of Service	5
8.4	Additional Testing	6

TARIFF BRANCH
RECEIVED
7/17/2006
PUBLIC SERVICE
COMMISSION
OF KENTUCKY

ISSUED: JULY 17, 2006
BY: Vice President
Lexington, Kentucky

EFFECTIVE: AUGUST 1, 2006

ACCESS SERVICE

TABLE OF CONTENTS (Cont'd)

		Page No.
8.	MISCELLANEOUS SERVICES (Cont'd)	
8.5	Balloting and Allocation Process for Equal Access	9
8.5.1	End User/Agent Lists	18
8.5.2	End User/Agent Lists - Rates and Charges	21
8.6	Miscellaneous Equipment	22
8.7	Restoration Priority	22
8.8	Telecommunications Service Priority	23
8.8.1	General	23
8.8.2	Priority Installation	23
8.8.3	Priority Restoration	24
8.8.4	Rates and Charges	25
8.9	Billing Name and Address Service	26
8.9.1	Rates and Charges	28
9.	INTERFACE GROUPS, TRANSMISSION SPECIFICATIONS AND CHANNEL CODES	1
9.1	Local Transport Interface Group	1
9.1.1	Interface Group 1 (USOC TPP1X)	2
9.1.2	Interface Group 2 (USOC TPP2X)	2
9.1.3	Interface Group 3 (USOC TPP3X)	2
9.1.4	Interface Group 4 (USOC TPP4X)	3
9.1.5	Interface Group 5 (USOC TPP5X)	3
9.1.6	Interface Group 6 (USOC TPP6X)	4
9.1.7	Interface Group 7 (USOC TPP7X)	4
9.1.8	Interface Group 8 (USOC TPP8X)	5
9.1.9	Interface Group 9 (USOC TPP9X)	5
9.1.10	Interface Group 10 (USOC TPP10X)	6
9.1.11	Available Premises Interface Codes	6

TARIFF BRANCH
RECEIVED
7/17/2006
PUBLIC SERVICE
COMMISSION
OF KENTUCKY

ISSUED: JULY 17, 2006
BY: Vice President
Lexington, Kentucky

EFFECTIVE: AUGUST 1, 2006

ACCESS SERVICE

TABLE OF CONTENTS (Cont'd)

		Page No.
9.	INTERFACE GROUPS, TRANSMISSION SPECIFICATIONS AND CHANNEL CODES (Cont'd)	
9.2	Transmission Specifications for Switched Access Service	10
9.2.1	Standard Transmission Specifications	10
9.2.2	Data Transmission Parameters	17
9.3	Channel Interface and Network Channel Codes	19
9.3.1	Glossary of Channel Interface Codes and Options	20
9.3.2	Impedance	24
9.3.3	Digital Hierarchy Channel Interface Codes (4DS)	24
9.3.4	Service Designator/Network Channel Code Conversion Table	25
9.3.5	Compatible Channel Interfaces	27
10.	SPECIAL FEDERAL GOVERNMENT ACCESS SERVICES	1
10.1	General	1
10.2	Emergency Conditions	2
10.3	Intervals to Provide Service	3
10.4	Safeguarding of Service	3
10.4.1	Facility Availability	3
10.5.	Federal Government Regulations	3
10.6	Service Offerings to the Federal Government	4
10.6.1	Type and Description	4
10.6.2	Mileage Application	7
10.6.3	Rates and Charges	8

TARIFF BRANCH
RECEIVED
7/17/2006
PUBLIC SERVICE
COMMISSION
OF KENTUCKY

ISSUED: JULY 17, 2006
BY: Vice President
Lexington, Kentucky

EFFECTIVE: AUGUST 1, 2006

ACCESS SERVICE

TABLE OF CONTENTS (Cont'd)

		Page No.
11.	SPECIAL FACILITIES ROUTING OF ACCESS SERVICES	1
11.1	Description of Special Facilities Routing of Access Service	1
11.1.1	Diversity	1
11.1.2	Avoidance	1
11.1.3	Cable-Only Facilities	1
11.2	Rates and Charges for Special Facilities Routing of Access Service	2
11.2.1	Diversity	2
11.2.2	Avoidance	2
11.2.3	Diversity and Avoidance Combined	3
11.2.4	Cable-Only Facilities	3
12.	SPECIALIZED SERVICE OR ARRANGEMENTS	1
12.1	General	1
13.	EXCEPTIONS TO ACCESS SERVICE OFFERINGS	1
14.	(RESERVED FOR FUTURE USE)	1
15.	SPECIAL CONSTRUCTION	1
15.1	Application of Tariff	1
15.2	Regulations	1
15.2.1	Filing of Charges	1
15.2.2	Ownership of Facilities	1
15.2.3	Interval to Provide Facilities	1
15.2.4	Special Construction Involving Both Interstate and Intrastate Facilities	1
15.2.5	Payments for Special Construction	2
15.2.6	Liabilities and Charges for Special Construction	3
15.2.7	Deferral of Start of Service	11
15.2.8	Definitions	12

TARIFF BRANCH
RECEIVED
7/17/2006
PUBLIC SERVICE
COMMISSION
OF KENTUCKY

ISSUED: JULY 17, 2006
BY: Vice President
Lexington, Kentucky

EFFECTIVE: AUGUST 1, 2006

ACCESS SERVICE

TABLE OF CONTENTS (Cont'd)

		Page No.
16.	ANCILLARY SERVICES	1
16.1	General	1
16.1.1	Service Offerings	1
16.1.2	Regulations	1
16.1.3	Description of Ancillary Services	7
16.1.4	Rate Regulations	18
16.1.5	Rates and Charges	22
17.	(RESERVED FOR FUTURE USE)	
18.	ADVANCED COMMUNICATIONS NETWORKS	1
18.1	General	1
18.2	Asynchronous Transfer Mode (ATM) Service	1
18.2.1	General	1
18.2.2	Rates and Charges	1
19.	COLLOCATION SERVICE	
19.1	General	1
19.2	Description of Types of Collocation	1
19.2.1	Single Caged	1
19.2.2	Shared Caged	1
19.2.3	Subleased Caged	2
19.2.4	Cageless	3
19.2.5	Adjacent	3
19.2.6	Other	3
19.3	Ordering Conditions	4
19.3.1	Application	4
19.3.2	Space Availability	6
19.3.3	Price Quote	6
19.3.4	ASR	6
19.3.5	Augmentation	6
19.3.6	Expansion	7
19.3.7	Relocation	7

TARIFF BRANCH
RECEIVED
7/17/2006
PUBLIC SERVICE
COMMISSION
OF KENTUCKY

ISSUED: JULY 17, 2006
BY: Vice President
Lexington, Kentucky

EFFECTIVE: AUGUST 1, 2006

ACCESS SERVICE

TABLE OF CONTENTS (Cont'd)

		Page No.
19.	COLLOCATION SERVICE (Cont'd)	
19.4	Installation and Operation	8
19.4.1	Joint Planning and Implementation Intervals	8
19.4.2	Forecasting and Use of Data	9
19.4.3	Collocation Capacity	9
19.4.4	Vendor Capacity	9
19.4.5	Responsibility for Vendor Delays	10
19.4.6	Space Preparation	10
19.4.7	Equipment and Facilities	10
19.4.8	Access to Collocation Space	14
19.4.9	Network Outage, Damage and Reporting	14
19.4.10	Security Requirements	15
19.4.11	Emergency Access	17
19.5	Space Requirements	18
19.5.1	Space Availability	18
19.5.2	Minimum/Maximum/Additional Space	18
19.5.3	Use of Space	19
19.5.4	Reservation of Space	19
19.5.5	Collocation Space Report	20
19.5.6	Reclamation	20
19.6	Indemnification	21
19.7	Insurance	22
19.7.1	Coverage Requirements	22
19.7.2	Deductibles	23
19.7.3	Additional Insureds	23
19.7.4	Waiver of Subrogation Rights	23
19.7.5	Evidence of Insurance	23
19.7.6	Compliance Requirements	24
19.8	Confidentiality	25
19.9	Casualty	26
19.10	Termination of Service	27
19.10.1	Grounds of Termination	27
19.10.2	Effects of Termination	27
19.11	Miscellaneous	27

TARIFF BRANCH
RECEIVED
7/17/2006
PUBLIC SERVICE
COMMISSION
OF KENTUCKY

ISSUED: April 27, 2007
BY: Vice President
Lexington, Kentucky

EFFECTIVE: May 12, 2007

ACCESS SERVICE

TABLE OF CONTENTS (Cont'd)

		Page No.	
19.	**COLLOCATION SERVICE (Cont'd)**		
19.12	**Rate Regulations**	**28**	
19.12.1	Rates of Charges	28	
19.12.2	Billing and Payment	28	
19.12.1	Rates of Charges	28	
19.12.2	Billing and Payment	28	
19.13	**Description and Application of Rate Elements**	**29**	
19.13.1	Non-Recurring Charges	29	
19.13.2	Monthly Charges	36	
19.13.3	Zone Specifications	39.1	(N)
19.14	**Rates and Charges**	**40**	
19.14.1	Engineering/Major Augment Fee	40	
19.14.2	Minor Augment Fee, Per Occurrence	40	
19.14.3	Access Card Administration, Per Card	40	
19.14.4	Cage Enclosure	40	
19.14.5	Cage Enclosure Augment	40	
19.14.6	BITS Timing	40	
19.14.7	Overhead Superstructure, Per Project	40	
19.14.8	Facility Pull/Termination-Engineering	40	
19.14.9	Facility Pull, Per Cable Run	40	
19.14.10	Cable Termination	41	
19.14.11	Fiber Cable Pull-Engineering	41	
19.14.12	Fiber Cable Pull-Place Innerduct	41	
19.14.13	Fiber Cable Pull-Labor	41	
19.14.14	Fiber Cable Pull-Cable Fire Retardant	41	
19.14.15	Fiber Splice-Engineering	41	
19.14.16	Fiber Cable Splice	41	
19.14.17	DC Power, Per 40 Amps	41	
19.14.18	Cable Material Charge, Per Cable Run	42	
19.14.19	Caged Floor Space, Per Square Foot	42	
19.14.20	Relay Rack Floor Space	42	
19.14.21	Cabinet Floor Space, Per Linear Foot	42	
19.14.22	Cable Subduct Space-Manhole	42	
19.14.23	Cable Subduct Space	43	
19.14.24	Fiber Cable Vault Splice-48 Fiber Material	43	
19.14.25	Fiber Cable Vault Splice-48 Fiber Per Subduct	43	
19.14.26	Fiber Cable Vault Splice-96 Fiber Material	43	
19.14.27	Fiber Cable Vault Splice-96 Fiber Per Subduct	43	
19.14.28	Cable Rack Space-Metallic	43	
19.14.29	Cable Rack Space-Fiber	43	
19.14.30	Facility Termination	43	

PUBLIC SERVICE COMMISSION
OF KENTUCKY
EFFECTIVE
5/12/2007
PURSUANT TO 807 KAR 5:011
SECTION 9 (1)

By_____
Executive Director

ISSUED: JULY 17, 2006
BY: Vice President
Lexington, Kentucky

EFFECTIVE: AUGUST 1, 2006

ACCESS SERVICE

TABLE OF CONTENTS (Cont'd)

		Page No.
19.	COLLOCATION SERVICE (Cont'd)	
19.14	Rates and Charges (Cont'd)	40
19.14.31	Building Modification	43
19.14.32	Environmental Conditioning	43
19.14.33	Adjacent Engineering Fee	43
19.14.34	Adjacent Fiber Cable Pull-Engineering	44
19.14.35	Adjacent Fiber Cable Pull-Place Innerduct	44
19.14.36	Adjacent Fiber Cable Pull Per Linear Foot	44
19.14.37	Adjacent Cable Fire Retardant Per Occurrence	44
19.14.38	Adjacent Metallic Cable Pull-Engineering	44
19.14.39	Adjacent Metallic Cable Pull Per Linear Foot	44
19.14.40	Adjacent Metallic Cable Splice	44
19.14.41	Adjacent Fiber Cable Splice	44
19.14.42	Adjacent Facility Pull-Engineering Per Project	44
19.14.43	Adjacent Facility Pull Per Linear Foot	45
19.14.44	Adjacent Cable Termination	45
19.14.45	Adjacent Subduct Space	45
19.14.46	Adjacent Conduit Space	45
19.14.47	Adjacent Facility Termination-Material	45
19.14.48	Adjacent Cable Vault Space	46
19.14.49	Adjacent Cable Rack Space	46
19.14.50	Collocation Space Report-Per Wire	46
19.14.51	Labor Rates, Per Technician	46

TARIFF BRANCH
RECEIVED
7/17/2006
PUBLIC SERVICE
COMMISSION
OF KENTUCKY

ISSUED: JULY 17, 2006
BY: Vice President
Lexington, Kentucky

EFFECTIVE: AUGUST 1, 2006

ACCESS SERVICE

EXPLANATION OF SYMBOLS

(C) - To signify changed regulation
(D) - To signify discontinued rate or regulation
(I) - To signify increase
(M) - To signify matter relocated without change
(N) - To signify new rate or regulation
(R) - To signify reduction
(S) - To signify reissued matter
(T) - To signify a change in text but no change in rate or regulation
(Z) - To signify a correction

EXPLANATION OF ABBREVIATIONS

ac - Alternating current
AML - Actual Measured Loss
ANI - Automatic Number Identification
AP - Program Audio
ASR - Access Service Request
ATM - Asynchronous Transfer Mode
AT&T - American Telephone and Telegraph Company
BD - Business Day
BHMC - Busy Hour Minutes of Capacity
CAROT - Centralized Automatic Reporting on Trunks
CCS7 - Common Channel Signaling System 7
CI - Changes Interface
CIR - Committed Information Rate
CO - Central Office
COCX - Central Office Centrex
Cont'd - Continued
CPE - Customer Provided Equipment
Ctx - Centrex
dB - decibel
dBmC - Decibel Reference Noise C-Message Weighting
dBmCO - Decibel Reference Noise C-Message Weighted 0
dBv - Decibel(s) Relative to 1 Volt (Reference)
dBvl - Decibel(s) Relative to 1 Volt (Reference)
dc - direct current
EDD - Envelope Delay Distortion
ELEPL - Equal Level Echo Path Loss
EML - Expected Measured Loss
EPL - Echo Path Loss
ERL - Echo Return Loss
ESS - Electronic Switching System
ESSX - Electronic Switching System Exchange
f - frequency

TARIFF BRANCH
RECEIVED
7/17/2006
PUBLIC SERVICE
COMMISSION
OF KENTUCKY

ISSUED: JULY 17, 2006
BY: Vice President
Lexington, Kentucky

EFFECTIVE: AUGUST 1, 2006

ACCESS SERVICE

EXPLANATION OF ABBREVIATIONS (Cont'd)

FID	- Field Identifier
FCC	- Federal Communications Commission
FX	- Foreign Exchange
HC	- High Capacity
Hz	- Hertz
IC	- Interexchange Carrier
ICB	- Individual Case Basis
ICL	- Inserted Connection Loss
KBPS	- Kilobits per second
KHZ	- Kilohertz
LATA	- Local Access and Transport Area
Ma	- Milliamperes
Mbps	- Megabits per second
MF	- Multifrequency
MHz	- Megahertz
MMUC	- Minimum Monthly Usage Charge
MRC	- Monthly Recurring Charge
MT	- Metallic
MTS	- Message Telecommunications Service(s)
NPA	- Numbering Plan Area
NRC	- Nonrecurring Charge
NTS	- Non-Traffic Sensitive
NXX	- Three-Digit Central Office Code
OTPL	- Zero Transmission Level Point
PBX	- Private Branch Exchange
PCM	- Pulse Code Modulation
PCR	- Peak Cell Rate
PLP	- Private Line Ringdown
POT	- Point Termination
Ms	- root-mean-square
RSM	- Remote Switching Modules
RSS	- Remote Switching Systems
SCR	- Sustained Cell Rate
SS7	- Signaling System 7
SRL	- Singing Return Loss
SSN	- Switched Service Network
STP	- Signaling Transfer Point
SWC	- Serving Wire Center
TES	- Telephone Exchange Service
TLP	- Transmission Level Point
TSPS	- Traffic Service Position System
TV	- Television
USOC	- Uniform Service Order Code
VG	- Voice Grade
V & H	- Vertical & Horizontal
WA	- Wideband Analog
WATS	- Wide Area Telecommunications Service(s)
WD	- Wideband Data

TARIFF BRANCH
RECEIVED
7/17/2006
PUBLIC SERVICE
COMMISSION
OF KENTUCKY

ISSUED: JULY 17, 2006
BY: Vice President
Lexington, Kentucky

EFFECTIVE: AUGUST 1, 2006

ACCESS SERVICE

REFERENCE TO OTHER TARIFFS

Whenever reference is made in this tariff to other tariffs of the Telephone Company, the reference is to the tariffs in force as of the effective date of this tariff, and to amendments thereto and successive issues thereof.

REFERENCE TO TECHNICAL PUBLICATIONS

The following technical publications are referenced in this tariff and may be obtained from Bell Communications Research, Inc., Distribution Storage Center, 60 New England Avenue, Piscataway, N.J. 08854.

Compatibility Bulletin 106, Issue 2
ISSUED: July 17, 2006 December, 1981 Available: March 11, 1992

Technical Reference:

PUB 41451 High Capacity Terrestrial Digital Service
ISSUED: July 17, 2006 January, 1983 Available: May 17, 1983

PUB 60101
ISSUED: July 17, 2006 December, 1982 Available: January 17, 1983

PUB 41004 Data Communications Using Voiceband Private Line Channels
ISSUED: July 17, 2006 October, 1973 Available: October, 1973

PUB 62310 Digital Data System Channel Interface Specification
ISSUED: July 17, 2006 September, 1983 Available: October, 1983

PUB 62411 High Capacity Digital Service Channel Interface Specifications
ISSUED: July 17, 2006 September, 1983 Available: October, 1983

TR-NPL-000334 Voice Grade Switched Access Service
ISSUED: July 17, 2006 June, 1986 Available: July, 1986

TR-NPL-000335 Voice Grade Special Access Service
ISSUED: July 17, 2006 June, 1986 Available: July, 1986

TR-NPL-000336 Metallic and Telegraph Grade Special Access Services
ISSUED: July 17, 2006 October, 1987 Available: October, 1987

PUB 62503 Program Audio Special Access Service
ISSUED: July 17, 2006 December, 1983 Available: March 15, 1984

TARIFF BRANCH
RECEIVED
7/17/2006
PUBLIC SERVICE
COMMISSION
OF KENTUCKY

ISSUED: JULY 17, 2006
BY: Vice President
Lexington, Kentucky

EFFECTIVE: AUGUST 1, 2006

ACCESS SERVICE

REFERENCE TO TECHNICAL PUBLICATIONS

PUB 62503 Addendum Program Audio Special Access Service
ISSUED: July 17, 2006 March, 1984 Available: April, 1984

TR-NPL-000338 Television Special Access and Local Channel Services
ISSUED: July 17, 2006 December, 1986 Available: December, 1986

PUB 62505 Wideband Analog Special Access Service
ISSUED: July 17, 2006 December, 1983 Available: January, 1984

PUB 62505 Addendum Wideband Analog Special Access Service
ISSUED: July 17, 2006 March, 1984 Available: April, 1984

PUB 62506 Wideband Digital Special Access Service
ISSUED: July 17, 2006 December, 1983 Available: January, 1984

PUB 62507 Digital Data Special Access Service
ISSUED: July 17, 2006 December, 1983 Available: March 15, 1984

PUB 62508 High Capacity Digital Special Access Service
ISSUED: July 17, 2006 December, 1983 Available: January, 1984

Multiple Exchange Carrier Access Billing Guidelines (MECAB)
ISSUED: July 17, 2006 November, 1987 Available: November, 1987

Multiple Exchange Carrier Ordering and Design Guidelines (MECOD)
ISSUED: July 17, 2006 November, 1985 Available: November, 1985

TARIFF BRANCH
RECEIVED
7/17/2006
PUBLIC SERVICE
COMMISSION
OF KENTUCKY

ISSUED: JULY 17, 2006
BY: Vice President
Lexington, Kentucky

EFFECTIVE: AUGUST 1, 2006

ACCESS SERVICE

REFERENCE TO TECHNICAL PUBLICATIONS

The following technical publication is referenced in this tariff and may be obtained from the Bell Communications Technical Education Center, Room B02, 6200 Route 53, Lisle, IL 60532.

Telecommunications Transmission Engineering
Volume 3 - Networks and Services (Chapter 6 and 7)
Second Edition, 1980
ISSUED: June, 1980 Available: June, 1980

The following Technical Publication is referenced in this tariff and may be obtained from the National Exchange Carrier Association, Inc., Director - Tariff and Regulatory Matters, 100 So. Jefferson Road, Whippany, NJ 07981 and the Federal Communications Commission's commercial contractor.

PUB AS No. 1, Issue II
ISSUED: May, 1984 Available: May, 1984
Addendum: March, 1987 Available: March, 1987

The following tariffs are referenced in this tariff and may be obtained from the Federal Communications Commission's commercial contractor.

National Exchange Carrier Association
Tariff FCC Nos. 4 and 5

TARIFF BRANCH
RECEIVED
7/17/2006
PUBLIC SERVICE
COMMISSION
OF KENTUCKY

ISSUED: JULY 17, 2006
BY: Vice President
Lexington, Kentucky

EFFECTIVE: AUGUST 1, 2006

ACCESS SERVICE

1. Application of Tariff

1.1 This tariff contains regulations, rates and charges applicable to the provision of Carrier Common Line, End User Access, Switched Access and Special Access Services, and other miscellaneous services, hereinafter referred to collectively as service(s), provided by the Issuing Carrier, of this tariff, hereinafter referred to as the Company, to customers.

1.2 The provision of such services by the Company as set forth in this tariff does not constitute a joint undertaking with the customer for the furnishing of any service.

TARIFF BRANCH
RECEIVED
7/17/2006
PUBLIC SERVICE
COMMISSION
OF KENTUCKY

ISSUED: JULY 17, 2006
BY: Vice President
Lexington, Kentucky

EFFECTIVE: AUGUST 1, 2006

ACCESS SERVICE

2. General Regulations

2.1 Undertaking of the Company

2.1.1 Scope

(A) The Company does not undertake to transmit messages under this tariff.

(B) The company shall be responsible only for the installation, operation and maintenance of the services it provides.

(C) The Company will, for maintenance purposes, test its services only to the extent necessary to detect and/or clear troubles.

(D) Services are provided 24 hours daily, seven days per week, except as set forth in other applicable sections of this tariff.

(E) The Company does not warrant that its facilities and services meet standards other than those set forth in this tariff.

2.1.2 Limitations

(A) The customer may not assign or transfer the use of services provided under this tariff, however, where there is no interruption of use of relocation of services, such assignment or transfer may be made to:

(1) another customer, whether an individual, partnership, association or corporation, provided the assignee or transferee assumes all outstanding indebtedness for such services, and the unexpired portion of the minimum period and the termination liability applicable to such services, if any; or

TARIFF BRANCH
RECEIVED
7/17/2006
PUBLIC SERVICE
COMMISSION
OF KENTUCKY

ISSUED: JULY 17, 2006
BY: Vice President
Lexington, Kentucky

EFFECTIVE: AUGUST 1, 2006

ACCESS SERVICE

2. General Regulations (Cont'd)

2.1 Undertaking of the Company (Cont'd)

2.1.2 Limitations (Cont'd)

(A) (Cont'd)

(1) a court-appointed receiver, trustee or other person acting pursuant to law in bankruptcy, receivership, reorganization, insolvency, liquidation or other similar proceedings, provided the assignee or transferee assumes the unexpired portion of the minimum period and the termination liability applicable to such services, if any.

In all cases of assignment or transfer, the written acknowledgment of the Company is required prior to such assignment or transfer which acknowledgment shall be made within 15 days from the receipt of notification. All rates, regulations and conditions contained in this tariff shall apply to such assignee or transferee.

The assignment or transfer of services does not relieve or discharge the assignor or transferor from remaining jointly or severally liable with the assignee or transferee for any obligation existing at the time of the assignment or transfer.

(B) The use and restoration of services shall be in accordance with Part 64, Subpart D, Appendix A, of the Federal Communications Commission's Rules and Regulations, which specifies the priority system for such activities.

(C) Subject to compliance with the rules mentioned in (B) preceding, the services offered herein will be provided to customers on a first-come, first-served basis, except as outlined in (D) following.

(D) When an end office is scheduled to be converted to an equal access end office, and a shortage of facilities exists, the Company will allocate available resources to participating ICs as set forth in 5.1.5(A) following.

TARIFF BRANCH
RECEIVED
7/17/2006
PUBLIC SERVICE
COMMISSION
OF KENTUCKY

ISSUED: JULY 17, 2006
BY: Vice President
Lexington, Kentucky

EFFECTIVE: AUGUST 1, 2006

ACCESS SERVICE

2. General Regulations (Cont'd)

2.1 Undertaking of the Company (Cont'd)

2.1.3 Liability

(A) The Company's liability, if any, for its willful misconduct is not limited by this tariff. With respect to any other claim or suit, by a customer or by any others, for damages associated with the installation, provision, termination, maintenance, repair or restoration, of service, and subject to the provisions of (B) through (G) following, the Company's liability if any, shall not exceed an amount equal to the proportionate charge for the service for the period during which the service was affected. This liability for damages shall be in addition to any amounts that may otherwise be due the customer under this tariff as a Credit Allowance for a Service Interruption.

(B) The Company shall not be liable for any act or omission of any other carrier or customer providing a portion of a service, nor shall the Company for its own act or omission hold liable any other carrier or customer providing a portion of a service.

(C) The Company is not liable for damages to the customer premises resulting from the furnishing of a service, including the installation and removal of equipment and associated wiring, unless the damage is caused by the Company's negligence.

(D) The Company shall be indemnified, defended and held harmless by the IC or end user against claim, loss or damage arising from the IC or end user's of services offered under this tariff, involving:

(1) Claims for libel, slander, invasion of privacy, or infringement of copyright arising from the IC or end user's own communications.

TARIFF BRANCH
RECEIVED
7/17/2006
PUBLIC SERVICE
COMMISSION
OF KENTUCKY

ISSUED: JULY 17, 2006
BY: Vice President
Lexington, Kentucky

EFFECTIVE: AUGUST 1, 2006

ACCESS SERVICE

2. General Regulations (Cont'd)

2.1 Undertaking of the Company (Cont'd)

2.1.3 Liability (Cont'd)

(D) (Cont'd)

(2) Claims for patent infringement arising from the customer's acts combining or using the service furnished by the Company in connection with facilities or equipment furnished by the IC or end user or;

(3) All other claims arising out of any act or omission of the IC or end user in the course of using services provided pursuant to this tariff.

(E) The Company does not guarantee or make any warranty with respect to its services when used in an explosive atmosphere. The Company shall be indemnified, defended and held harmless by the customer from any and all claims by any person relating to such customer's use of services so provided.

(F) No license under patents (other than the limited license to use) is granted by the Company or shall be implied or arise by estoppel, with respect to any service offered under this tariff.

(G) The Company's failure to provide or maintain services under this tariff shall be excused by labor difficulties, governmental orders, civil commotions, criminal actions taken against the Company, acts of God and other circumstances beyond the Company's reasonable control, subject to the Credit Allowance for a Service Interruption as set forth in 2.4.4 following.

TARIFF BRANCH
RECEIVED
7/17/2006
PUBLIC SERVICE
COMMISSION
OF KENTUCKY

ISSUED: JULY 17, 2006
BY: Vice President
Lexington, Kentucky

EFFECTIVE: AUGUST 1, 2006

ACCESS SERVICE

2. General Regulations (Cont'd)

2.1 Undertaking of the Company (Cont'd)

2.1.4 Provision of Services

The Company, to the extent that such services are or can be made available with reasonable effort, and after provision has been made for the Company's telephone exchange services, will provide to the customer upon reasonable notice services offered in other applicable sections of this tariff at rates and charges specified therein.

2.1.5 Installation and Termination of Services

The services provided under this tariff (A) will include any entrance cable or drop wiring and wire or intrabuilding cable to that point where provision is made for termination of the Company's outside distribution network facilities at a location at the customer-designated premises and (B) will be installed by the Company to such Point of Termination. The Company will work cooperatively with the customer to determine the location of the Point of Termination in accordance with the Company's standard operating procedures.

Each Access Service has only one Point of Termination per customer premises. Any additional terminations beyond such Point of Termination are the sole responsibility of the customer. Moves of the Point of Termination are handled as set forth in 6.5.4(C) and 7.2.1(D)(3) following.

2.1.6 Maintenance of Services

The services provided under this tariff shall be maintained by the Company. The customer or others may not rearrange, move, disconnect, remove or attempt to repair any facilities provided by the Company, other than by connection or disconnection to any interface means used, except with the written consent of the Company.

TARIFF BRANCH
RECEIVED
7/17/2006
PUBLIC SERVICE
COMMISSION
OF KENTUCKY

ISSUED: JULY 17, 2006
BY: Vice President
Lexington, Kentucky

EFFECTIVE: AUGUST 1, 2006

ACCESS SERVICE

2. General Regulations (Cont'd)

2.1 Undertaking of the Company (Cont'd)

2.1.7 Changes, Substitutions and Rearrangements

Except as provided for equipment and systems subject to FCC Part 68 Regulations at 47 C.F.R. Section 68.110(b), the Company may, where such action is reasonably required in the operation of its business;

(A) Substitute, change or rearrange any facilities used in providing service under this tariff, including but not limited to;

(1) substitution of different metallic facilities,
(2) substitution of carrier or derived facilities for metallic facilities used to provide other than metallic facilities, and
(3) substitution of metallic facilities for carrier or derived facilities used to provide other than metallic facilities; and
(4) change in the routing of access service traffic.

(B) Change minimum protection criteria;

(C) Change operating or maintenance characteristics of facilities or,

(D) Change operations or procedures of the Company.

In case of any such substitution, change or rearrangement, the transmission parameters will be within the range as set forth in Sections 6., 7. and 9. following. The Company shall not be responsible if any such substitution, change or rearrangement renders any customer furnished services obsolete or requires modification or alteration thereof or otherwise affects their use or performance. If such substitution, change or rearrangement materially affects the operating characteristics of the facility, the Company will provide reasonable notification to the customer in writing. Reasonable time will be allowed for any redesign and implementation required by the change in operating characteristics. The Company will work cooperatively with the customer to determine reasonable notification procedures.

TARIFF BRANCH
RECEIVED
7/17/2006
PUBLIC SERVICE
COMMISSION
OF KENTUCKY

ISSUED: JULY 17, 2006
BY: Vice President
Lexington, Kentucky

EFFECTIVE: AUGUST 1, 2006

ACCESS SERVICE

2. General Regulations (Cont'd)

2.1 Undertaking of the Company (Cont'd)

2.1.8 Refusal and Discontinuance of Service

(A) Unless the provisions of 2.2.1(B) or 2.5 following apply, if a customer fails to comply with the regulations set forth in: 2.1.6; Maintenance of Services, 2.2.2; Unlawful Use, 2.3.1; Damages, 2.3.4; Availability for Testing, 2.3.5; Balance, and 2.4; Payment Arrangements and Credit Allowances, or fails to make any payment to be made by it on the dates and times herein specified, the Company may, on thirty (30) days written notice by Certified U.S. Mail to the person designated by that customer to receive such notices of noncompliance:

(1) Refuse additional applications for service and/or refuse to complete any pending orders for service by the non-complying customer; and/or

(2) Discontinue the provision of the services to the noncomplying customer. In the case of such discontinuance, all applicable charges including termination charges shall become due.

If the Company does not refuse additional applications for service on the date specified in the thirty (30) days notice given pursuant to (1) above, or does not discontinue its provision of services involved on the date specified in the thirty (30) day notice given pursuant to (2) above and the customer's noncompliance continues, nothing contained herein shall preclude the Company's right to refuse additional applications for service to the non-complying customer without further notice.

(B) When access service is provided by more than one Company, the Companies involved in providing the joint service may individually or collectively deny service to a customer for nonpayment. Where the Company(s) affected by the nonpayment is incapable of effecting discontinuance of service without cooperation from the other joint providers of Switched Access Service, such other Company(s) will, if technically feasible, assist in denying the joint service to the customer. Service denial for such joint service will only include calls originating or terminating within, or transiting, the operating territory of the Companies initiating the service denial for nonpayment. When more than one of the joint providers must deny service to effectuate termination for nonpayment in cases where a conflict exists in the applicable tariff provisions, the tariff regulations of the end office Company shall apply for joint service discontinuance.

TARIFF BRANCH
RECEIVED
7/17/2006
PUBLIC SERVICE
COMMISSION
OF KENTUCKY

ISSUED: JULY 17, 2006
BY: Vice President
Lexington, Kentucky

EFFECTIVE: AUGUST 1, 2006

ACCESS SERVICE

2. General Regulations (Cont'd)

2.1 Undertaking of the Company (Cont'd)

2.1.8 Refusal and Discontinuance of Service (Cont'd)

(C) If the National Exchange Carrier Association, Inc. notifies the Company that the customer has failed to comply with Section 8 of the National Exchange Carrier Association, Inc., Tariff F.C.C. No. 5 (Lifeline Assistance and Universal Service Fund charges) including any customer's failure to make payments on the date and times specified therein, the Company, may, on thirty days' written notice to the customer by Certified U.S. Mail, take any of the following actions: - (1) refuse additional applications for service and/or (2) refuse to complete any pending orders for service, (3) discontinue the provision of service to the customer. In the case of discontinuance, all applicable charges including termination charges, shall become due.

TARIFF BRANCH
RECEIVED
7/17/2006
PUBLIC SERVICE
COMMISSION
OF KENTUCKY

ISSUED: JULY 17, 2006
BY: Vice President
Lexington, Kentucky

EFFECTIVE: AUGUST 1, 2006

ACCESS SERVICE

2. General Regulations (Cont'd)

2.1 Undertaking of the Company (Cont'd)

2.1.9 Limitation of Use of Metallic Facilities

Signals applied to a metallic facility shall conform to the limitations set forth in Technical Reference Publication AS No. 1. In the case of applications of dc telegraph signaling systems, the customer shall be responsible, at its expense, for the provision of current limiting devices to protect the Company facilities from excessive current due to abnormal conditions and for the provision of noise mitigation networks when required to reduce excessive noise.

2.1.10 Notification of Service-Affecting Activities

The Company will provide the customer reasonable notification of service-affecting activities that may occur in normal operation of its business. Such activities may include, but are not limited to, equipment or facilities additions, removals or rearrangements, routine preventative maintenance and major switching machine change-out. Generally, such activities are not individual customer service specific, they affect many customer services. No specific advance notification period is applicable to all service-affecting activities. The Company will work cooperatively with the customer to determine the notification requirements.

2.1.11 Coordination with Respect to Network Contingencies

The Company intends to work cooperatively with the customer to develop network contingency plans in order to maintain maximum network capability following natural or man-made disasters which affect telecommunications services.

2.1.12 Provision and Ownership of Telephone Numbers

The Company reserves the reasonable right to assign, designate or change telephone numbers, any other call number designations associated with Access Services, or the Company serving central office prefixes associated with such numbers, when necessary in the conduct of its business. Should it become necessary to make a change in such number(s), the Company will furnish to the customer 6 months notice, by Certified U.S. Mail, of the effective date and an explanation of the reason(s) for such change(s).

TARIFF BRANCH
RECEIVED
7/17/2006
PUBLIC SERVICE
COMMISSION
OF KENTUCKY

ISSUED: JULY 17, 2006
BY: Vice President
Lexington, Kentucky

EFFECTIVE: AUGUST 1, 2006

ACCESS SERVICE

2. General Regulations (Cont'd)

2.2 Use

2.2.1 Interference or Impairment

(A) The characteristics and methods of operation of any circuits, facilities or equipment provided by other then the Company and associated with the facilities utilized to provide services under this tariff shall not interfere with or impair service over any facilities of the Company, its affiliated companies, or its connecting and concurring carriers involved in its services, cause damage to their plant, impair the privacy of any communications carried over their facilities or create hazards to the employees of any of them or the public.

(B) Except as provided for equipment or systems subject to the FCC Part 68 Rules in 47 C.F.R. Section 68.108, if such characteristics or methods of operation are not in accordance with (A) preceding, the Company will, where practicable, notify the customer that temporary discontinuance of the use of a service may be required; however, where prior notice is not practicable, nothing contained herein shall be deemed to preclude the Company's right to temporarily discontinue forthwith the use of a service if such action is reasonable under the circumstances. In case of such temporary discontinuance, the customer will be promptly notified and afforded the opportunity to correct the condition which gave rise to the temporary discontinuance. During such period of temporary discontinuance, credit allowance for service interruptions as set forth in 2.4.4 following is not applicable.

2.2.2 Unlawful Use

The service provided under this tariff shall not be used for an unlawful purpose.

TARIFF BRANCH
RECEIVED
7/17/2006
PUBLIC SERVICE
COMMISSION
OF KENTUCKY

ISSUED: JULY 17, 2006
BY: Vice President
Lexington, Kentucky

EFFECTIVE: AUGUST 1, 2006

ACCESS SERVICE

2. General Regulations (Cont'd)

2.3 Obligations of the Customer

2.3.1 Damages

The customer shall reimburse the Company for damages to Company facilities utilized to provide services under this tariff caused by the negligence or willful act of the customer, or resulting from the customer's improper use of the Company facilities, or due to malfunction of any facilities or equipment provided by other than the Company. Nothing in the foregoing provision shall be interpreted to hold one customer liable for another customer's actions. The Company will, upon reimbursement for damages, cooperate with the customer in prosecuting a claim against the person causing such damage and the customer shall be subrogated to the right of recovery by the Company for the damages to the extent of such payment.

2.3.2 Ownership of Facilities and Theft

Facilities utilized by the Company to provide service under the provisions of this tariff shall remain the property of the Company. Such facilities shall be returned to the Company by the customer, whenever requested, within a reasonable period following the request in as good condition as reasonable wear will permit.

2.3.3 Equipment Space and Power

The customer shall furnish or arrange to have furnished to the Company, at no charge, equipment space and electrical power required by the Company to provide services under this tariff at the points of termination of such services. The selection of ac or dc power shall be mutually agreed to by the customer and the Company. The customer shall also make necessary arrangement in order that the Company will have access to such spaces at reasonable times for installing, testing, repairing or removing Company services.

TARIFF BRANCH
RECEIVED
7/17/2006
PUBLIC SERVICE
COMMISSION
OF KENTUCKY

ISSUED: JULY 17, 2006
BY: Vice President
Lexington, Kentucky

EFFECTIVE: AUGUST 1, 2006

ACCESS SERVICE

2. General Regulations (Cont'd)

2.3 Obligations of the Customer (Cont'd)

2.3.4 Availability for Testing

The services provided under this tariff shall be available to the Company at times mutually agreed upon in order to prevent the Company to make tests and adjustments appropriate for maintaining the services in satisfactory operating condition. Such tests and adjustments shall be completed within a reasonable time. No credit will be allowed for any interruptions involved during such tests and adjustments.

2.3.5 Balance

All signals for transmission over the services provided under this tariff shall be delivered by the customer balanced to ground except for ground start, duplex (DX) and McCulloh-Loop (Alarm System) type signaling and dc telegraph transmission at speeds of 75 baud or less.

2.3.6 Design of Customer Services

Subject to the provisions of 2.1.7 preceding, the customer shall be solely responsible, at its own expense, for the overall design of its services and for any redesigning or rearrangement of its services which may be required because of changes in facilities, operations or procedures of the Company, minimum protection, criteria or operating or maintenance characteristics of the facilities.

2.3.7 References to the Company

The customer may advise End Users that certain services are provided by the Company in connection with the service the customer furnishes to End Users; however, the customer shall not represent that the Company jointly participates in the customer's services.

2.3.8 Claims and Demands for Damages

(A) With respect to claims of patent infringement made by third persons, the customer shall defend, indemnify, protect and save harmless the Company from and against all claims arising out of the combining with, or use in connection with, the services provided under this tariff, any circuit, apparatus, system or method provided by the customer.

TARIFF BRANCH
RECEIVED
7/17/2006
PUBLIC SERVICE
COMMISSION
OF KENTUCKY

ISSUED: JULY 17, 2006
BY: Vice President
Lexington, Kentucky

EFFECTIVE: AUGUST 1, 2006

ACCESS SERVICE

2. General Regulations (Cont'd)

2.3 Obligations of the Customer (Cont'd)

2.3.8 Claims and Demands for Damages (Cont'd)

(B) The customer shall defend, indemnify and save harmless the Company from and against any suits, claims, losses or damages, including punitive damages, attorney fees and court costs by third persons arising out of the construction, installation, operation, maintenance, or removal of the customer's circuits, facilities, or equipment connected to the Company's services provided under this tariff, including, without limitation, Workmen's Compensation claims, actions for infringement of copyright and/or unauthorized use of program material, libel and slander actions based on the content of communications transmitted over the customer's circuits, facilities or equipment, and proceedings to recover taxes, fines, or penalties for failure of the customer to obtain or maintain in effect any necessary certificates, permits, licenses, or other authority to acquire or operate the services provided under this tariff; provided, however, the foregoing indemnification shall not apply to suits, claims, and demands to recover damages for damage to property, death, or personal injury unless such suits, claims or demands are based on the tortuous conduct of the customer, its officers, agents or employees.

(C) The customer shall defend, indemnify and save harmless the Company from and against any suits, claims, losses or damages, including punitive damages, attorney fees and court costs by the customer or third parties arising out of any act or omission of the customer in the course of using services provided under this tariff.

2.3.9 Coordination with Respect to Network Contingencies

The customer shall, in cooperation with the Company, coordinate in planning the actions to be taken to maintain maximum network capability following natural or man-made disasters which affect telecommunications services.

2.3.10 Sectionalization and Trouble Reporting

The customer will be responsible for reporting troubles sectionalized to Company facilities and/or equipment. When trouble cannot be clearly sectionalized to the Company facilities and/or equipment, the Company will test cooperatively or independently to assist in trouble sectionalization.

TARIFF BRANCH
RECEIVED
7/17/2006
PUBLIC SERVICE
COMMISSION
OF KENTUCKY

ISSUED: December 17, 2012
BY: Vice President
Lexington, Kentucky

EFFECTIVE: January 1, 2013

ACCESS SERVICE

2. General Regulations (Cont'd)

2.4 Payment Arrangements and Credit Allowances

2.4.1 Payment of Rates, Charges and Deposits

(A) Deposits

The Company will, in order to safeguard its interests, only require a customer which has a proven history of late payments to the Company or does not have established credit, to make a deposit prior to or at any time after the provision of a service to the customer to be held by the Company as a guarantee of the payment of rates and charges. No such deposit will be required of a customer which is a successor of a company which has established credit and has no history of late payments to the Company. Such deposit may not exceed the actual or estimated rates and charges for the service for a two month period. The fact that a deposit has been made in no way relieves the customer from complying with the Company's regulations as to the prompt payment of bills. At such time as the provision of the service to the customer is terminated, the amount of the deposit will be credited to the customer's account and any credit balance which may remain will be refunded.

Such a deposit will be refunded or credited to the account when the customer has established credit or, in any event, after the customer has established a one-year prompt payment record at any time prior to the termination of the provision of the service to the customer. In case of a cash deposit, for the period the deposit is held by the Company, the customer will receive interest at the rate prescribed by law beginning on the date of the deposit. If interest is paid or credited to the customer's bill prior to twelve (12) months from the date of deposit or the last interest payment date, the payment or credit shall be on a prorated basis. C C

KENTUCKY
PUBLIC SERVICE COMMISSION
JEFF R. DEROUEN
EXECUTIVE DIRECTOR
TARIFF BRANCH
Bunt Kirtley
EFFECTIVE
1/1/2013
PURSUANT TO 807 KAR 5:011 SECTION 9 (1)

ISSUED: JULY 17, 2006
BY: Vice President
Lexington, Kentucky

EFFECTIVE: AUGUST 1, 2006

ACCESS SERVICE

2. General Regulations (Cont'd)

2.4 Payment Arrangements and Credit Allowances (Cont'd)

2.4.1 Payment of Rates, Charges and Deposits (Cont'd)

(B) Payment of Rates and Charges

The Company shall bill on a current basis all charges incurred by and credits due to the customer under this tariff attributable to services established or discontinued during the preceding billing period. In addition, the Company shall bill in advance charges for all services to be provided during the ensuing billing period except for charges associated with service usage and for the Federal Government which will be billed in arrears. The bill day (i.e., the billing date of a bill for a customer for Access Service under this tariff), the period of service each bill covers and the payment date will be as follows:

(1) For end User Access Service and Presubscription Service, the Company will establish a bill day each month for each end user account. The bill will cover End User Access Service charges for the ensuing billing period except for End User Access Service for the Federal Government which will be billed in arrears. Any applicable Presubscription Charges, any known unbilled charges for prior periods and any known unbilled adjustments for prior periods for End User Access Service and Presubscription Service will be applied to this bill. Such bills are due when rendered.

(2) For Switched Access Service, Special Access Service, and Miscellaneous Service charges, the Company will establish a bill day each month for each customer account. The bill will cover nonusage sensitive service charge for the ensuing billing period for which the bill is rendered, any known unbilled nonusage sensitive charges for prior period and unbilled usage for the period after the last bill day through the current bill day. Any known unbilled usage charges for prior periods and known unbilled adjustments will be applied to this bill. Payment for such bills is due as set forth in (3) following. If payment is not received by the payment date, as set forth in (3) following in immediately available funds, a late payment penalty will apply as set forth in (C) following.

(3) All bills dated as set forth in (2) preceding for service, provided to the customer by the Company are due 31 days (payment date) after the bill date or by the next bill date (i.e., same date in the following month as the bill date), whichever is the shortest interval, except as provided herein, and are payable in immediately available funds.

TARIFF BRANCH
RECEIVED
7/17/2006
PUBLIC SERVICE
COMMISSION
OF KENTUCKY

ISSUED: JULY 17, 2006
BY: Vice President
Lexington, Kentucky

EFFECTIVE: AUGUST 1, 2006

ACCESS SERVICE

2. General Regulations (Cont'd)

2.4 Payment Arrangements and Credit Allowances (Cont'd)

2.4.1 Payment of Rates, Charges and Deposits (Cont'd)

(B) Payment of Rates and Charges (Cont'd)

(3) (Cont'd)

If such payment date would cause payment to be due on a Saturday, Sunday or Holiday (i.e., New Year's Day, Independence Day, Labor Day, Thanksgiving Day, Christmas Day, the first Tuesday in November and the day when Washington's Birthday, Memorial Day or Columbus Day is legally observed), payment for such bills will be due from the customer as follows:

If such payment date falls on Sunday or on a Holiday which is observed on a Monday, the payment date shall be the first non-Holiday day following such Sunday or Holiday. If such payment date falls on a Saturday or on a Holiday which is observed on Tuesday, Wednesday, Thursday or Friday, the payment date shall be the last non-Holiday day preceding such Saturday or Holiday.

(C) Late Payment Penalty

If no payment is received by the payment date or if a payment or any portion of a payment is received by the Telephone Company after the payment date, or if a payment or any portion of a payment is received by the Telephone Company in funds which are not immediately available to the Telephone Company, then a late payment penalty shall be due to the Telephone Company. The late payment penalty shall be the payment or the portion of the payment not received by the payment date times a late factor. The late factor shall be the lesser of:

(a) the highest interest rate (in decimal value) which may be levied by law for commercial transactions, compounded daily for the number of days from the payment date to and including the date that the customer actually makes the payment to the Telephone Company, or

(b) 0.000590 per day, compounded daily for the number of days from the payment date to and including the date that the customer actually makes the payment to the Telephone Company.

TARIFF BRANCH
RECEIVED
7/17/2006
PUBLIC SERVICE
COMMISSION
OF KENTUCKY

ISSUED: JULY 17, 2006
BY: Vice President
Lexington, Kentucky

EFFECTIVE: AUGUST 1, 2006

ACCESS SERVICE

2. General Regulations (Cont'd)

2.4 Payment Arrangements and Credit Allowances (Cont'd)

2.4.1 Payment of Rates, Charges and Deposits (Cont'd)

(D) Billing Disputes

In the event that a billing dispute occurs concerning any charges billed to the customer by the Company the following regulations will apply.

(1) The date of the dispute shall be the date on which the customer furnishes the Company sufficient documentation to investigate the claim. Documentation must include, at the minimum, the account number under which the bill has been rendered, the date of the bill, the specific items on the bill being disputed, and, when possible, the applicable tariff section if the dispute is predicated on a tariff rate or regulation.

(2) The date of resolution shall be the date on which the Company completes its investigation of the dispute, notifies the customer of the disposition and applies a credit for the amount of the dispute resolved in the customer's favor or late payment penalty as appropriate. The Company will work cooperatively with any customer to resolve billing disputes.

(3) If a billing dispute is resolved in favor of the Company, any payments withheld pending resolution of the dispute shall be subject to the late payment penalty as set forth in (C) preceding.

(4) If the customer pays the total billed amount and disputes all or part of the amount, the Company will refund any overpayment and will apply a credit for a disputed amount penalty as set forth in (a) and (b) following.

(a) If a customer disputes a bill within ninety (90) days of the payment date established by the Company, and the billing dispute is resolved in favor of the customer, the customer will receive a credit for a disputed amount penalty from the Company for the period starting with the date of overpayment and ending on the date of resolution. The credit for a disputed amount penalty shall be an amount equal to the disputed amount resolved in the customer's favor times a penalty factor as set forth in (4)(b) following.

TARIFF BRANCH
RECEIVED
7/17/2006
PUBLIC SERVICE
COMMISSION
OF KENTUCKY

ISSUED: January 16, 2009
BY: Vice President
Lexington, Kentucky

EFFECTIVE: January 31, 2009

ACCESS SERVICE

2. General Regulations (Cont'd)

2.4 Payment Arrangements and Credit Allowances (Cont'd)

2.4.1 Payment of Rates, Charges and Deposits (Cont'd)

(D) Billing Disputes (Cont'd)

(4) (Cont'd)

(b) If a customer disputes a bill after ninety (90) days from the payment date established by the Company, and the billing dispute is resolved in favor of the customer, the customer will receive a credit for a disputed amount penalty from the Company for the period starting with the latter of the date of claim or date of overpayment and ending on the date of resolution. The credit for a disputed amount penalty shall be an amount equal to the disputed amount resolved in the customer's favor times 1% per month or 12% annually.

(E) Billing Adjustments and Rounding

When a rate as set forth in this tariff is shown to more than two decimal places, the charges will be determined using the rate shown. The resulting amount will then be rounded to the nearest penny (i.e., rounded to two decimal places). (C)

PUBLIC SERVICE COMMISSION
OF KENTUCKY
EFFECTIVE
1/31/2009
PURSUANT TO 807 KAR 5:011
SECTION 9 (1)

By _____
Executive Director

ISSUED: JULY 17, 2006
BY: Vice President
Lexington, Kentucky

EFFECTIVE: AUGUST 1, 2006

ACCESS SERVICE

2. General Regulations (Cont'd)

2.4 Payment Arrangements and Credit Allowances (Cont'd)

2.4.1 Payment of Rates, Charges and Deposits (Cont'd)

(F) Provision of Access Service Billing and Bill Verification

(1) The Company will, upon reasonable request and if available, furnish such detailed information as may be required for verification of any bill.

(2) The customer will receive its monthly bills in a standard paper format, or, at the customer's option, on magnetic tape in standard industry format for those access services for which the Company is technically capable of providing magnetic tape billing. Additional copies of the customer's bill may be provided in standard paper format at the rates and charges set forth in (3) following. When the customer requests a paper copy of the customer's bill in addition to the customer bill provided on magnetic tape, the rate set forth in (3) following shall apply per page.

(3) Additional copies of the customer's monthly bill or service and features record in standard paper format, per page	Rate $0.10

TARIFF BRANCH
RECEIVED
7/17/2006
PUBLIC SERVICE
COMMISSION
OF KENTUCKY

ISSUED: JULY 17, 2006
BY: Vice President
Lexington, Kentucky

EFFECTIVE: AUGUST 1, 2006

ACCESS SERVICE

2. General Regulations (Cont'd)

2.4 Payment Arrangements and Credit Allowances (Cont'd)

2.4.2 Minimum Periods

The minimum period for which services are provided and for which rates and charges are applicable is one month except as otherwise specified.

The minimum period for which service is provided and for which rates and charges are applicable for a Specialized Service or Arrangement provided on an individual case basis as set forth in 12 following, is one month unless a different minimum period is established with the individual case filing.

When a service is discontinued prior to the expiration of the minimum period, charges are applicable, whether the service is used or not, as follows:

(A) When a service with a one month minimum period is discontinued prior to the expiration of the minimum period, a one month charge will apply at the rate level in effect at the time service is discontinued.

(B) When a service with a minimum period greater than one month is discontinued prior to the expiration of the minimum period, the applicable charge will be the lesser of:

(1) the Company's total nonrecoverable costs less the net salvage value for the discontinued service, or

(2) the total monthly charges, at the rate level in effect at the time service is discontinued, for the remainder of the minimum period.

2.4.3 Cancellation of an Order for Service

Provisions for the cancellation of an order for service are set forth in Section 5.3.2 following.

TARIFF BRANCH
RECEIVED
7/17/2006
PUBLIC SERVICE
COMMISSION
OF KENTUCKY

ISSUED: JULY 17, 2006
BY: Vice President
Lexington, Kentucky

EFFECTIVE: AUGUST 1, 2006

ACCESS SERVICE

2. General Regulations (Cont'd)

2.4 Payment Arrangements and Credit Allowances (Cont'd)

2.4.4 Credit Allowance for Service Interruption (Cont'd)

(B) Special Access Services (Cont'd)

(1) (Cont'd)

The monthly charges used to determine the credit shall be as follows:

(a) For two point services, the monthly charge subject to credit shall be the total of all the monthly rate element charges associated with the service (i.e., two circuit terminations, circuit mileage and optional features and functions).

(b) For multipoint services, the monthly charge subject to credit shall be only the total of all the monthly rate element charges associated with that portion of the service that is inoperative (i.e., a circuit termination per customer premises, circuit mileage and optional features and functions).

(c) For multiplexed services, the monthly charge subject to credit shall be the total of all the monthly rate element charges associated with that portion of the service that is inoperative. When the facility which is multiplexed or the multiplexer itself is inoperative, the monthly charge shall be the total of all the monthly rate element charges associated with the service (i.e., the circuit termination, circuit mileage and optional features and functions, including the multiplexer on the facility to the hub, and the circuit terminations, circuit mileages and optional features and functions on the individual services from the hub). When the service which rides a circuit of the multiplexed facility is inoperative, the monthly charge shall be the total of all the monthly rate element charges associated with that portion of the service from the Hub to a customer premises (i.e., circuit termination, circuit mileage and optional features and functions).

(2) For Program Audio and Video Special Access Services, no circuit shall be allowed for an interruption of less than 30 seconds. The customer shall be credited for an interruption of 30 seconds or more as follows:

(a) For two-point services, when monthly rates are applicable, the credit shall be at the rate of 1/8640 of the monthly charges for the service for each period of 5 minutes or major fraction thereof that the interruption continues.

TARIFF BRANCH
RECEIVED
7/17/2006
PUBLIC SERVICE
COMMISSION
OF KENTUCKY

ISSUED: JULY 17, 2006
BY: Vice President
Lexington, Kentucky

EFFECTIVE: AUGUST 1, 2006

ACCESS SERVICE

2. General Regulations (Cont'd)

2.4 Payment Arrangements and Credit Allowances (Cont'd)

2.4.4 Credit Allowance for Service Interruption (Cont'd)

(B) Special Access Services (Cont'd)

(2) (Cont'd)

(b) For two-point services, when daily rates are applicable, the credit shall be at the rate of 1/288 of the daily charges for the service for each period of 5 minutes or major fraction thereof that the interruption continues.

(c) For multipoint services, when monthly rates are applicable, the credit shall be at the rate of 1/8640 of the monthly charges for each circuit termination, circuit mileage and optional features and functions that are inoperative for each period of 5 minutes or major fraction thereof that the interruption continues.

(d) For multipoint services, when daily rates are applicable, the credit shall be at the daily rate of 1/288 of the daily charges for each circuit termination, circuit mileage and optional features and functions that are inoperative for each period of 5 minutes or major fraction thereof that the interruption continues.

(e) For multipoint services, the credit for the monthly or daily charges includes the charges for the distribution amplifier only when the distribution amplifier is inoperative.

(f) When two or more interruptions occur during a period of 5 consecutive minutes, such multiple interruptions shall be considered as one interruption.

(3) For certain Special Access services (Wideband Digital, WD1-3; Digital Data Access, DA1-4; and High Capacity, HCI), any period during which the error performance is below that specified for the service will be considered as an interruption.

(C) Switched Access Service

For Switched Access Service, no credit shall be allowed for an interruption of less than 24 hours. The customer shall be credited for an interruption of 24 hours or more at the rate of 1/30 of any applicable monthly charge, assumed usage, or minimum monthly usage charge for each period of 24 hours or major fraction thereof that the interruption continues.

TARIFF BRANCH
RECEIVED
7/17/2006
PUBLIC SERVICE
COMMISSION
OF KENTUCKY

ISSUED: JULY 17, 2006
BY: Vice President
Lexington, Kentucky

EFFECTIVE: AUGUST 1, 2006

ACCESS SERVICE

2. General Regulations (Cont'd)

2.4 Payment Arrangements and Credit Allowances (Cont'd)

2.4.4 Credit Allowance for Service Interruption (Cont'd)

(D) When a Credit Allowance Does Not Apply

No credit allowance will be made for:

(1) Interruptions caused by the negligence of the customer.

(2) Interruptions of a service due to the failure of equipment or systems provided by the customer or others.

(3) Interruptions of service during any period in which the Company is not afforded access to the premises where the service is terminated.

(4) Interruptions of service when the customer has released that service to the Company for maintenance purposes, to make arrangements, or for the implementation of an order for a change in the service during the time that was negotiated with the customer prior to the release of that service. Thereafter, a credit allowance as set forth in (B) preceding applies.

(5) Interruptions of a service which continue because of the failure of the customer to authorize replacement of any element of special construction, as set forth in Section 15 of this tariff. The period for which no credit allowance is made begins on the seventh day after the customer receives the Company's written notification of the need for such replacement and ends on the day after receipt by the Company of the customer's written authorization for such replacement.

(6) Periods when the customer elects not to release the service of testing and/or repair and continues to use it on an impaired basis.

(7) An interruption or a group of interruptions, resulting from a common cause, for amounts less than one dollar.

TARIFF BRANCH
RECEIVED
7/17/2006
PUBLIC SERVICE
COMMISSION
OF KENTUCKY

ISSUED: JULY 17, 2006
BY: Vice President
Lexington, Kentucky

EFFECTIVE: AUGUST 1, 2006

ACCESS SERVICE

2. General Regulations (Cont'd)

2.4 Payment Arrangements and Credit Allowances (Cont'd)

2.4.4 Credit Allowance for Service Interruption (Cont'd)

(E) Use of an Alternative Service Provided by the Company

Should the customer elect to use an alternative service provided by the Company during the period that a service is interrupted, the customer must pay the tariffed rates and charges for the alternative service used.

(F) Temporary Surrender of a Service

In certain instances, the customer may be requested by the Company to surrender a service for purposes other than maintenance, testing or activity relating to a service order. If the customer consents, a credit allowance will be granted. The credit allowance will be 1/1440 of the monthly rate for each period of 30 minutes or fraction thereof that the service is surrendered. In no case will the credit allowance exceed the monthly rate for the service surrendered in any one monthly billing period.

TARIFF BRANCH
RECEIVED
7/17/2006
PUBLIC SERVICE
COMMISSION
OF KENTUCKY

ISSUED: JULY 17, 2006
BY: Vice President
Lexington, Kentucky

EFFECTIVE: AUGUST 1, 2006

ACCESS SERVICE

2. General Regulations (Cont'd)

2.4 Payment Arrangements and Credit Allowances (Cont'd)

2.4.5 Re-establishment of Service Following Fire, Flood or Other Occurrence

(A) Nonrecurring Charges Do Not Apply

Charges do not apply for the re-establishment of service following a fire, flood or other occurrence attributed to an Act of God provided that:

(1) The service is of the same type as was provided prior to the fire, flood or other occurrence.

(2) The service is for the same customer.

(3) The service is at the same location on the same premises.

(4) The re-establishment of service begins within 60 days after Company service is available. (The 60 day period may be extended a reasonable period if the renovation of the original location on the premises affected is not practical within the allotted time period).

(B) Nonrecurring Charges Apply

Nonrecurring Charges apply for establishing service at a different location on the same premises or at a different premises pending re-establishment of service at the original location.

2.4.6 Title or Ownership Rights

The payment of rates and charges by Customers for the services offered under the provisions of this tariff does not assign, confer or transfer title or ownership rights to proposals or facilities developed or utilized, respectively, by the Company in the provision of such services.

TARIFF BRANCH
RECEIVED
7/17/2006
PUBLIC SERVICE
COMMISSION
OF KENTUCKY

ISSUED: JULY 17, 2006
BY: Vice President
Lexington, Kentucky

EFFECTIVE: AUGUST 1, 2006

ACCESS SERVICE

2. General Regulations (Cont'd)

2.4 Payment Arrangements and Credit Allowances (Cont'd)

2.4.7 Access Services Provided by More Than One Company

The Company will perform the rating and billing of Access Services under this tariff where more than one Company is involved in the provision of Access Service as set forth in (A), (B) or (C) following. The Single Company Billing arrangement as set forth in (A) following will be used for FGA Switched Access Services except where interconnection arrangements between the telephone companies involved permit the use of the Multiple Company Billing arrangement as set forth in (B) following. The Company will notify the customer of the billing arrangement when the customer orders FGA service. The Multiple Company Billing arrangement, as set forth in (B) following, will be used for all FGB, FGC, FGD, 800/877/888 Access, and 900 Access Switched Access Services and Special Access Services.

(A) Single Company Billing

The Company receiving the order from the customer as specified in 5.2(A) following will arrange to provide the service, determine the applicable charges and bill the customer for the entire service in accordance with its Access Services tariff.

(B) Multiple Company Billing

(1) For access services subject to Multiple Company Billing, the customer will be billed in accordance with the Exchange Carrier Standards Association's Multiple Exchange Carrier Access Billing Guidelines (MECAB) and Multiple Exchange Carrier Ordering and Design Guidelines (MECOD). One of the following methods will be used.

Single Bill - The customer will receive a single bill for all access services provided by multiple Companies. The single bill will include all rate elements applicable to the access service provided under one billing account.

TARIFF BRANCH
RECEIVED
7/17/2006
PUBLIC SERVICE
COMMISSION
OF KENTUCKY

ISSUED: JULY 17, 2006
BY: Vice President
Lexington, Kentucky

EFFECTIVE: AUGUST 1, 2006

ACCESS SERVICE

2. General Regulations (Cont'd)

2.4 Payment Arrangements and Credit Allowances (Cont'd)

2.4.7 Access Services Provided by More Than One Company (Cont'd)

(B) Multiple Company Billing (Cont'd)

(1) (Cont'd)

Multiple Bill - The customer will receive a bill from each Company providing the access service. Multiple bills will include all charges applicable to the individual portion of the access service provided by each Company. Such bills will include the following information in accordance with the MECAB Guidelines:

- Billing Account Reference (BAR)
- Billing Account Cross Reference (BACR)
- Billing Account Number (BAN)
- End Office NPA/NXX or End Office CLLI Code
- Common EC Circuit Identifiers (Special Access)
- Billing Percentages as listed in NECA Tariff No. 4
- Percent Interstate Usage (PIU)
- Usage "from" and "through" dates

The choice of billing method shall be determined by the Companies involved. The Company will notify the customer which method applies when the customer orders access service and will provide the customer thirty days' notice in the event that the billing method is changed.

(2) For Switched Access Tandem-Switched Transport Services, the Company will determine the applicable charges as follows:

(a) Determine the distance in airlines miles using the V&H method set forth in National Exchange Carrier Association Tariff FCC No. 4, between the Company's end office switch and the customer's serving wire center, or between the access tandem and the end office switch if Direct-Trunk Transport is ordered directly to the tandem.

TARIFF BRANCH
RECEIVED
7/17/2006
PUBLIC SERVICE
COMMISSION
OF KENTUCKY

ISSUED: JULY 17, 2006
BY: Vice President
Lexington, Kentucky

EFFECTIVE: AUGUST 1, 2006

ACCESS SERVICE

2. General Regulations (Cont'd)

2.4 Payment Arrangements and Credit Allowances (Cont'd)

2.4.7 Access Services Provided by More Than One Company (Cont'd)

(B) Multiple Company Billing (Cont'd)

(2) (Cont'd)

(b) The airline distance in miles developed in (a) preceding will be multiplied by the Tandem-Switched Transport Facility rate times the number of access minutes of use times the billing percentage to determine the appropriate Local Transport charges. The billing percentage is that portion of local transport to be billed by each company and is mutually agreed upon by the Companies involved in providing Access Services to the customer. Billing percentages are listed in National Exchange Carrier Association Tariff FCC No. 4.

(c) The total Local Transport charge shall be the Tandem-Switched Transport Facility charge as determined in (b) preceding plus the Tandem-Switched Transport Termination rate times the number of access minutes of use times the number of terminations.

Where the Tandem-Switched Transport-Facility is provided by more than one telephone company, the Tandem-Switched Transport-Termination rate applies for the termination at the Telephone Company end of the Tandem-Switched Transport (i.e., the first point of switching or the end office serving the end user). The Switched Transport Termination rate will not apply when the Telephone Company is the intermediate provider of the Switched Transport Facility.

(d) All other appropriate recurring and nonrecurring charges in each Company's access tariff are applicable. The Nonrecurring Charges for Switched Access, as set forth in 6.5.4 following, apply in full.

(3) For Special Access Services and Switched Access Direct-Trunked Transport, the Company will determine the applicable charges as follows:

(a) Determine the distance in airline miles using the V&H method set forth in National Exchange Carrier Association Tariff No. 4 between the locations involved; i.e., the serving wire center associated with the customer designated premise and an end office, or a Telephone Company hub, or two Company hubs, to an end office, or a hub to a tandem.

TARIFF BRANCH
RECEIVED
7/17/2006
PUBLIC SERVICE
COMMISSION
OF KENTUCKY

ISSUED: JULY 17, 2006
BY: Vice President
Lexington, Kentucky

EFFECTIVE: AUGUST 1, 2006

ACCESS SERVICE

2. General Regulations (Cont'd)

2.4 Payment Arrangements and Credit Allowances (Cont'd)

2.4.7 Access Services Provided by More Than One Company (Cont'd)

(B) Multiple Company Billing (Cont'd)

(3) (Cont'd)

(b) The airline distance in miles developed in (a) preceding will be multiplied by the Special Access Circuit Mileage-Per Mile or Switched Access Direct-Trunked Transport Mileage rate element times the billing percentage to determine the appropriate charges. The billing percentage is that portion of circuit mileage to be billed by each company involved in providing Access Services to the customer. Billing percentages are listed in National Exchange Carrier Association Tariff FCC No. 4.

(c) For Special Access, the total Circuit Mileage charge shall be the Circuit Mileage-Per Mile charge determined in (b) preceding plus the Circuit Mileage-Fixed charges. The Circuit Mileage-Fixed charge is always applied in full, once per circuit mileage facility, whether the Company provides one, or more than one, circuit mileage facility termination(s). The Circuit Mileage-Fixed rate does not apply when the Company provides an intermediate portion of a circuit mileage facility and no circuit mileage terminations.

(d) For Switched Access, the total Direct-Trunked Transport charges shall be the Direct-Trunked Transport Mileage charge determined in (b) preceding plus the Direct-Trunked Transport - Fixed charges. The Fixed charge is always applied in full, once per Direct-Trunked Transport facility whether the Telephone Company provides one, or more than one, facility termination(s). The Fixed charge does not apply when the Telephone Company provides an intermediate portion of a Direct-Trunked Transport facility and no terminations.

(e) All other appropriate recurring and nonrecurring charges in each Company's access tariff are applicable. The Special Access Nonrecurring Charge for circuit installation applies in full once per Circuit Termination provided by the Company.

(4) The Interconnection Charge for Switched Transport shall be billed by the Telephone Company in whose territory the end office is located.

TARIFF BRANCH
RECEIVED
7/17/2006
PUBLIC SERVICE
COMMISSION
OF KENTUCKY

ISSUED: JULY 17, 2006
BY: Vice President
Lexington, Kentucky

EFFECTIVE: AUGUST 1, 2006

ACCESS SERVICE

2. General Regulations (Cont'd)

2.4 Payment Arrangements and Credit Allowances (Cont'd)

2.4.7 Access Services Provided by More Than One Company (Cont'd)

(C) EAS and Access Tandem Arrangement

Where a customer utilizes FGA and/or FGB Switched Access Services to originate or terminate calls within and Extended Area Service (EAS) calling area or access tandem network provided by more than one Company, the Company may apply additional Switched Access Service charges as set forth in (1) following, provided the following criteria are met:

- the telephone companies involved are not the same Company and do not provide service under the same Access Service tariff,

- the telephone companies do not have a revenue sharing arrangement where one telephone company bills the total cost of access which includes the other telephone company's cost of access,

- The telephone companies involved do not bill Switched Access charges in accordance with the Multiple Company Billing Arrangement for subtending end offices of an access tandem as set forth in (B) preceding.

Companies which apply additional charges to the service mentioned above are listed in Section 14 following.

(1) For FGA usage which originates or terminates at a Company end office within an EAS calling area where the first point of switching (dial tone office) is provided by a different telephone company, the Company will apply Local Transport Mileage and Circuit Connection rates to originating access minutes, plus End Office rates to originating and terminating access minutes as set forth in 6.6 following. The mileage used to determine the Local Transport Mileage charges will be based on the airline distance between the end office where the call originates and the dial tone office where the FGA service is provided. Such Switched Access charges will be in addition to those charges assessed by the telephone company in whose exchange the first point of switching (dial tone office) is located. Such usage will be determined as set forth in (2) following.

TARIFF BRANCH
RECEIVED
7/17/2006
PUBLIC SERVICE
COMMISSION
OF KENTUCKY

ISSUED: JULY 17, 2006
BY: Vice President
Lexington, Kentucky

EFFECTIVE: AUGUST 1, 2006

ACCESS SERVICE

2. General Regulations (Cont'd)

2.4 Payment Arrangements and Credit Allowances (Cont'd)

2.4.7 Access Services Provided by More Than One Company (Cont'd)

(C) EAS and Access Tandem Arrangement (Cont'd)

(2) FGA or FGB usage originating or terminating at Company end offices in EAS or access tandem arrangements shall be determined as follows:

(a) Where end office specific usage data are available, such data will be used to determine the charges.

(b) Where end office specific usage data are not available, the total originating and/or terminating usage will be the measured usage or assumed usage at the first point of switching (i.e., dial tone office for FGA or access tandem for FGB). Originating and/or terminating usage will be determined based upon the ratios of the total number of subscriber lines in the Company exchange to the total number of subscriber lines in the EAS calling area or access tandem network. These ratios will be applied to the total number or originating and/or terminating access minutes to determine the access minutes for the Company exchange.

(3) The ratio used to calculate the access minutes as set forth in (2) preceding will be determined by the telephone company and provided to the customer upon request.

TARIFF BRANCH
RECEIVED
7/17/2006
PUBLIC SERVICE
COMMISSION
OF KENTUCKY

ISSUED: JULY 17, 2006
BY: Vice President
Lexington, Kentucky

EFFECTIVE: AUGUST 1, 2006

ACCESS SERVICE

2. General Regulations (Cont'd)

2.5 Connections

Equipment and Systems (i.e., terminal equipment, multiline terminating systems and communications systems) may be connected with Switched and Special Access Service furnished by the Company where such connection is made in accordance with the provisions specified in Technical Reference Publication AS No. 1 and in 2.1 preceding.

2.6 Definitions

Certain terms used herein are defined as follows:

Access Area

The term "Access Area" denotes a specific calling area serviced by one or more Central Offices associated with the various Switched Access Services offered under this tariff. The size and configuration of the Access Area a customer obtains is dependent upon the Feature Group type and the specific characteristics of the Central Office or Access Tandem Network in which the connection is made.

Access Code

The term "Access Code" denotes a uniform seven digit code assigned by the Company to an individual customer. The seven digit code has the form 101XXXX or 950-XXXX.

Access Minutes

The term "Access Minutes" denotes that usage of exchange facilities in intrastate or foreign service for the purpose of calculating chargeable usage. On the originating end of an intrastate or foreign call, usage is measured from the time the originating end user's call is delivered by the Company to and acknowledged as received by the customer's facilities connected with the originating exchange. On the terminating end of an intrastate or foreign call, usage is measured from the time the call is received by the end user in the terminating exchange. Timing of usage at both originating and terminating ends of an intrastate or foreign call shall terminate when the calling or called party disconnects, whichever event is recognized first in the originating and terminating exchanges, as applicable.

TARIFF BRANCH
RECEIVED
7/17/2006
PUBLIC SERVICE
COMMISSION
OF KENTUCKY

ISSUED: JULY 17, 2006
BY: Vice President
Lexington, Kentucky

EFFECTIVE: AUGUST 1, 2006

ACCESS SERVICE

2. General Regulations (Cont'd)

2.6 Definitions (Cont'd)

Access Tandem

The term "Access Tandem" denotes a Company switching system that provides a concentration and distribution function for originating and/or terminating traffic between end offices and a customer's premises.

Access Tandem Network

The term "Access Tandem Network" denotes the network of trunk groups that provide a concentration and distribution function for originating and/or terminating Switched Access traffic between a single access tandem and Company subtending end offices.

Agent

The term "Agent", as used in Section 8.5 of this tariff, is defined as that person or entity that the Telephone Company acknowledges as the possessor of authority to make decisions pertaining to instrument placement, subscription authorization, and access or usage control of Public or Semipublic Pay Telephone Service or, that person or entity duly authorized to act in that capacity by the owner of the premises.

Answer Message

The term "Answer Message" denotes an SS7 message sent in the backward direction to indicate that the call has been answered.

Answer/Disconnect Supervision

The term "Answer/Disconnect Supervision" denotes the transmission of the switch trunk equipment supervisory signal (off-hook or on-hook) to the customer's point of termination as an indication that the called party has answered or disconnected.

Attenuation Distortion

The term "Attenuation Distortion" denotes the difference in loss at specified frequencies relative to the loss at 1004 Hz, unless otherwise specified.

Balance (100 Type) Test Line

The term "Balance (100 Type) Test Line" denotes an arrangement in an end office which provides for balance and noise testing.

TARIFF BRANCH
RECEIVED
7/17/2006
PUBLIC SERVICE
COMMISSION
OF KENTUCKY

ISSUED: JULY 17, 2006
BY: Vice President
Lexington, Kentucky

EFFECTIVE: AUGUST 1, 2006

ACCESS SERVICE

2. General Regulations (Cont'd)

2.6 Definitions (Cont'd)

Bit

The term "Bit" denotes the smallest unit of information in the binary system of notation.

Business Day

The term "Business Day" denotes the times of day that a company is open for business. Generally, in the business community, these are 8:00 or 9:00 A.M. to 5:00 or 6:00 P.M., respectively, with an hour for lunch, Monday through Friday, resulting in a standard forty (40) hour work week. However, Business Day hours for the Company may vary based on company policy, union contract and location. To determine such hours for an individual company, or company location, contact the issuing officer at the address shown on Title Page 1.

Busy Hour Minutes of Capacity (BHMC)

The term "Busy Hour Minutes of Capacity (BHMC)" denotes the customer specified maximum amount of Switched Access Service access minutes the customer expects to be handled in an end office switch during any hour in an 8:00 A.M. to 11:00 P.M. period for the Switched Access Arrangement ordered. This customer furnished BHMC quantity is the input data the Company uses to determine the number of transmission paths or facility requirements for the Switched Access Arrangement ordered.

Call

The term "Call" denotes a customer attempt for which the complete address code (e.g., 0-, 911, or 10 digits) is provided to the serving dial tone office.

Carrier and Common Carrier

See Interexchange Carrier.

CCS

The term "CCS" denotes a hundred call seconds, which is a standard unit of traffic load that is equal to 100 seconds of usage or capacity of a group of servers (e.g., trunks).

TARIFF BRANCH
RECEIVED
7/17/2006
PUBLIC SERVICE
COMMISSION
OF KENTUCKY

ISSUED: JULY 17, 2006
BY: Vice President
Lexington, Kentucky

EFFECTIVE: AUGUST 1, 2006

ACCESS SERVICE

2. General Regulations (Cont'd)

2.6 Definitions (Cont'd)

Central Office

The term "Central Office" denotes a local Company switching system where Telephone Exchange Service customer station loops are terminated for purposes of interconnection to each other and to trunks.

Central Office Prefix

The term "Central Office Prefix" denotes the first three digits (NXX) of the seven digit telephone number assigned to a customer's Telephone Exchange Service when dialed on a local basis.

Centralized Automatic Reporting on Trunks Testing

The term "Centralized Automatic Reporting on Trunks Testing" denotes a type of testing which includes the capacity for measuring operational and transmission parameters.

Circuit(s)

The term "Circuit(s)" denotes an electrical or photonic, in the case of fiber optic-based transmission systems, communications path between two or more points of termination.

Channel Service Unit

The term "Channel Service Unit" denotes customer premises equipment which performs one or more of the following functions: termination of a digital facility, regeneration of digital signals, detection and/or correction of signal format error, and remote loop back.

Channelize

The term "Channelize" denotes the process of multiplexing-demultiplexing wider bandwidth or higher speed channels into narrow band-width or lower speed channels.

TARIFF BRANCH
RECEIVED
7/17/2006
PUBLIC SERVICE
COMMISSION
OF KENTUCKY

ISSUED: JULY 17, 2006
BY: Vice President
Lexington, Kentucky

EFFECTIVE: AUGUST 1, 2006

ACCESS SERVICE

2. General Regulations (Cont'd)

2.6 Definitions (Cont'd)

C-Message Noise

The term "C-Message Noise" denotes the frequency weighted average noise within an idle voice channel. The frequency weighting, called C-Message, is used to simulate the frequency characteristic of the 500-type telephone set and the hearing of the average subscriber.

C-Notched Noise

The term "C-Notched Noise" denotes the C-message frequency weighted noise on a voice channel with a holding tone, which is removed at the measuring end through a notch (very narrow band) filter.

Coin Station

The term "Coin Station" denotes a location where Company equipment is provided in a public or semipublic place where Company customers can originate telephone communications and pay the applicable charges by inserting coins into the equipment.

Common Channel Signaling System 7 Network (CCS7)

The term "Common Channel Signaling System 7 Network (CCS7)" denotes a dedicated out-of-band signaling network which utilizes Signaling System 7 (SS7) protocol to provide call handling and data base access services.

Common Line

The term "Common Line" denotes a line, trunk, pay telephone line or other facility provided under the general and/or local exchange service tariffs of the Company, terminated on a central office switch. A common line-residence is a line or trunk provided under the residence regulations of the general and/or local exchange service tariffs. A common line-business is a line provided under the business regulations of the general and/or local exchange service tariffs.

Communications System

The term "Communications System" denotes channels and other facilities which are capable of communications between terminal equipment provided by other than the Company.

TARIFF BRANCH
RECEIVED
7/17/2006
PUBLIC SERVICE
COMMISSION
OF KENTUCKY

ACCESS SERVICE

2. General Regulations (Cont'd)

2.6 Definitions (Cont'd)

Customer(s) (C)

The term "Customer(s)" denotes any individual, partnership, association, joint-stock company, trust, corporation, or governmental entity or other entity which subscribes to the services offered under this tariff, including but not limited to Interexchange Carriers (ICs), End Users and other telecommunications carriers or providers originating or terminating toll VoIP-PSTN traffic. (C)

Data Transmission (107 Type) Test Line

The term "Data Transmission (107 Type) Test Line" denotes an arrangement which provides for a connection to a signal source which provides test signals for one-way testing of data and voice transmission parameters.

Decibel

The term "Decibel" denotes a unit used to express relative differences in power, usually between acoustic or electric signals, equal to ten (10) times the common logarithm of the ratio of two signal powers.

Decibel Reference Noise C-Message Weighting

The term "Decibel Reference Noise C-Message Weighting" denotes noise power measurements with C-Message Weighting in decibels relative to a reference 1000 Hz tone of 90 dB below 1 milliwatt.

Decibel Reference Noise C-Message Referenced to 0

The term "Decibel Reference Noise C-Message Reference to 0" denotes noise power in "Decibel Reference Noise C-Message Weighting" referred to or measured at a zero transmission level point.

Dual Tone Multifrequency Address Signaling

The term "Dual Tone Multifrequency Address Signaling" denotes a type of signaling that is an optional feature of Switched Access Feature Group A. It may be utilized when Feature Group A is being used in the terminating direction (from the point of termination with the customer to the local exchange end office). An office arranged for Dual Tone Multifrequency Signaling would expect to receive address signals from the customer in the form of Dual Tone Multifrequency signals.

KENTUCKY
PUBLIC SERVICE COMMISSION
JEFF R. DEROUEN
EXECUTIVE DIRECTOR
TARIFF BRANCH
Bunt Kirtley
EFFECTIVE
1/7/2012
PURSUANT TO 807 KAR 5:011 SECTION 9 (1)

ISSUED: JULY 17, 2006
BY: Vice President
Lexington, Kentucky

EFFECTIVE: AUGUST 1, 2006

ACCESS SERVICE

2. General Regulations (Cont'd)

2.6 Definitions (Cont'd)

Echo Control

The term "Echo Control" denotes the control of reflected signals in a telephone transmission path.

Echo Path Loss

The term "Echo Path Loss" denotes the measure of reflected signal at a 4-wire point of interface without regard to the send and receive Transmission Level Point.

Echo Return Loss

The term "Echo Return Loss" denotes a frequency weighted measure of return loss over the middle of the voiceband (approximately 500 to 2500 Hz), where talker echo is most annoying.

Effective 2-Wire

The term "Effective 2-Wire" denotes a condition which permits the simultaneous transmission in both directions over a channel, but it is not possible to insure independent information transmission in both directions. Effective 2-wire channels may be terminated with 2-wire or 4-wire interfaces.

Effective 4-Wire

The term "Effective 4-Wire" denotes a condition which permits the simultaneous independent transmission of information in both directions over a channel. The method of implementing effective 4-wire transmission is at the discretion of the Company (physical, time domain, frequency-domain separation or echo cancellation techniques). Effective 4-wire channels may be terminated with a 2-wire interface at the customer's premises. However, when terminated 2-wire, simultaneous independent transmission cannot be supported because the two wire interface combines the transmission paths into a single path.

TARIFF BRANCH
RECEIVED
7/17/2006
PUBLIC SERVICE
COMMISSION
OF KENTUCKY

ISSUED: JULY 17, 2006
BY: Vice President
Lexington, Kentucky

EFFECTIVE: AUGUST 1, 2006

ACCESS SERVICE

2. General Regulations (Cont'd)

2.6 Definitions (Cont'd)

End Office Switch

The term "End Office Switch" denotes a local Company switching system where Telephone Exchange Service customer station loops are terminated for purposes of interconnection to each other and to trunks. Included may be Remote Switching Modules and Remote Switching Systems served by a host office in a different wire center.

End User

The term "End User" denotes any customer of intrastate or foreign telecommunications service that is not a carrier, except that a carrier shall be deemed to be an "end user" to the extent that such carrier uses a telecommunications service for administrative purposes, without making such service available to others, directly or indirectly.

Entry Switch

See First Point of Switching.

Envelope Delay Distortion

The term "Envelope Delay Distortion" denotes a measure of the linearity of the phase versus frequency of a channel.

Equal Level Echo Path Loss

The term "Equal Level Echo Path Loss" (ELEPL) denotes the measure of Echo Path Loss (EPL) at a 4-wire interface which is corrected by the difference between the send and receive Transmission Level Point (TLP). [ELEPL = TLP (send) + TLP (receive)]

Exchange

The term "Exchange" denotes a unit generally smaller than a local access and transport area, established by the Company for the administration of communications service in a specified area which usually embraces a city, town or village and its environs. It consists of one or more central offices together with the associated facilities used in furnishing communications service within the area. One or more designated exchanges comprise a given local access and transport area.

TARIFF BRANCH
RECEIVED
7/17/2006
PUBLIC SERVICE
COMMISSION
OF KENTUCKY

ISSUED: JULY 17, 2006
BY: Vice President
Lexington, Kentucky

EFFECTIVE: AUGUST 1, 2006

ACCESS SERVICE

2. General Regulations (Cont'd)

2.6 Definitions (Cont'd)

Exit Message

The term "Exit Message" denotes an SS7 message sent to an end office by the Telephone Company tandem switch to mark the Carrier Connect Time when the Telephone Company's tandem switch sends an Initial Address Message to an Interexchange Customer.

Expected Measured Loss

The term "Expected Measured Loss" denotes a calculated loss which specifies the end-to-end 1004-Hz loss on a terminated test connection between two readily accessible manual or remote test points. It is the sum of the inserted connection loss and test access loss including any test pads.

Extended Area Service

The term "Extended Area Service" denotes a telephone exchange service in which a customer in one exchange can call a local number in another exchange that is part of the extended area without paying a toll charge.

Field Identified

The term "Field Identifier" denotes two to four characters that are used on service orders to convey specific instructions. Field Identifiers may or may not have associated data. Selected Field Identifiers are used in Company billing systems to generate nonrecurring charges.

First Come - First Served

The term "First Come - First Served" denotes a procedure followed by the Company to process fully completed Access Orders according to the sequence in which they are received.

First Point of Switching

The term "First Point of Switching" denotes the first Company location at which switching occurs on the termination path of a call proceeding from the customer premises to the terminating end office and, at the same time, the last Company location at which switching occurs on the originating path of a call proceeding from the originating end office to the customer premises.

TARIFF BRANCH
RECEIVED
7/17/2006
PUBLIC SERVICE
COMMISSION
OF KENTUCKY

ISSUED: JULY 17, 2006
BY: Vice President
Lexington, Kentucky

EFFECTIVE: AUGUST 1, 2006

ACCESS SERVICE

2. General Regulations (Cont'd)

2.6 Definitions (Cont'd)

Frequency Shift

The term "Frequency Shift" denotes the change in the frequency of a tone as it is transmitted over a channel.

Grandfathered

The term "Grandfathered" denotes Terminal Equipment, Multiline Terminating Systems and Protective Circuitry directly connected to the facilities utilized to provide services under the provisions of this tariff, and which are considered grandfathered under Part 68 of the F.C.C.'s Rules and Regulations.

Host Office

The term "Host Office" denotes an electronic switching system which provides call processing capabilities for one or more Remote Switching Modules or Remote Switching Systems.

Immediately Available Funds

The term "Immediately Available Funds" denotes a corporate or personal check drawn on a bank account and funds which are available for use by the receiving party on the same day on which they are received and include U.S. Federal Reserve bank wire transfers, U.S. Federal Reserve notes (paper cash), U.S. coins, U.S. Postal Money Orders and New York Certificates of Deposit.

Impedance Balance

The term "Impedance Balance" denotes the method of expressing Echo Return Loss and Singing Return Loss at a 4-wire interface whereby the gains and/or loss of the 4 wire portion of the transmission path, including the hybrid, are not included in the specification.

Impulse Noise

The term "Impulse Noise" denotes any momentary occurrence of the noise on a channel over a specified level threshold. It is evaluated by counting the number of occurrences which exceed the threshold.

TARIFF BRANCH
RECEIVED
7/17/2006
PUBLIC SERVICE
COMMISSION
OF KENTUCKY

ISSUED: JULY 17, 2006
BY: Vice President
Lexington, Kentucky

EFFECTIVE: AUGUST 1, 2006

ACCESS SERVICE

2. General Regulations (Cont'd)

2.6 Definitions (Cont'd)

Individual Case Basis

The term "Individual Case Basis" denotes a condition in which the regulations, if applicable, rates and charges for an offering under the provisions of this tariff are developed based on the circumstances in each case.

Initial Address Message (IAM)

The term "Initial Address Message (IAM)" denotes an SS7 message sent in the forward direction to initiate trunk set up with the busying of an outgoing trunk which carries the information about that trunk along with other information relating to the routing and handling of the call to the next switch.

Inserted Connection Loss

The term "Inserted Connection Loss" denotes the 1004 HZ power difference (in dB) between the maximum power available at the originating end and the actual power reaching the terminating end through the inserted connection.

Interexchange Carrier (IC) or Interexchange Common Carrier

The terms "Interexchange Carrier" (IC) or Interexchange Common Carrier" denotes any individual, partnership, association, joint-stock company, trust, governmental entity or corporation engaged for hire in intrastate or foreign communications by wire or radio, between two or more exchanges.

Intermodulation Distortion

The term "Intermodulation Distortion" denotes a measure of the nonlinearity of a channel. It is measured using four tones, and evaluating the ratios (in dB) of the transmitted composite four-tone signal power to the second-order products of the tones (R2), and the third-order products of the tones (R3).

Interstate Communications

The term "Interstate Communications" denotes both interstate and foreign communications.

Intrastate Communications

The term "Intrastate Communications" denotes any communications within a state subject to oversight by a state regulatory commission as provided by the laws of the state involved.

TARIFF BRANCH
RECEIVED
7/17/2006
PUBLIC SERVICE
COMMISSION
OF KENTUCKY

ISSUED: JULY 17, 2006
BY: Vice President
Lexington, Kentucky

EFFECTIVE: AUGUST 1, 2006

ACCESS SERVICE

2. General Regulations (Cont'd)

2.6 Definitions (Cont'd)

Line Side Connection

The term "Line Side Connection" denotes a connection of a transmission path to the line side of a local exchange switching system.

Local Access and Transport Area

The term "Local Access and Transport Area" (LATA) denotes a geographic area established by the Company for the provision and administration of its communications service. It encompasses one or more Company designated exchanges which are configured in relative proximity to one another and may be reconfigured by the Company in the normal operation of its business. As used herein, the term LATA refers only to these Company designated exchanges and does not necessarily have any predetermined association with the term LATA used by other exchange carriers.

Location Provider

The term "Location Provider" denotes a person or persons possessing the legal authority to permit the Company to place public and semi-public pay telephone on their premises.

Loop Around Test Line

The term "Loop Around Test Line" denotes an arrangement utilizing a Company central office to provide a means to make certain two-way transmission tests on a manual basis. This arrangement has two central office terminations, each reached by means of separate telephone numbers and does not require any specific customer premises equipment. Equipment subject to this test arrangement is at the discretion of the customer.

Loss Deviation

The term "Loss Deviation" denotes the variation of the actual loss from the designed value.

Message

The term "Message" denotes a "call" as defined preceding.

Milliwatt (102 Type) Test Line

The term "Milliwatt (102 Type) Test Line" denotes an arrangement in an end office which provides a 1004 Hz tone at 0 dBm0 for one-way transmission measurements towards the customer's premises from the Company end office.

TARIFF BRANCH
RECEIVED
7/17/2006
PUBLIC SERVICE
COMMISSION
OF KENTUCKY

ISSUED: JULY 17, 2006
EFFECTIVE: AUGUST 1, 2006
BY: Vice President
Lexington, Kentucky

ACCESS SERVICE

2. General Regulations (Cont'd)

2.6 Definitions (Cont'd)

Network Control Signaling

The term "Network Control Signaling" denotes the transmission of signals used in the telecommunications system which performs functions such as supervision (control, status, and charge signals), address signaling (e.g., dialing), calling and called number identifications, rate of flow, service selection error control and audible tone signals (call progress signals indicating re-order or busy conditions, alerting, coin denominations, coin collect and coin return tones) to control the operation of the telecommunications system.

Nonsynchronous Test Line

The term "Nonsynchronous Test Line" denotes an arrangement in step-by-step end offices which provides operational tests which are not as complete as those provided by the synchronous test lines, but can be made more rapidly.

North American Numbering Plan

The term "North American Numbering Plan" denotes a three digit area (Numbering Plan Area) code and a seven-digit telephone number made up of a three-digit Central office code plus a four-digit station number.

Off-hook

The term "Off-hook" denotes the active condition of Switched Access or a Telephone Exchange Service Line.

On-hook

The term "On-hook" denotes the idle condition of Switched Access or a Telephone Exchange Service Line.

Open Circuit Test Line

The term "Open Circuit Test Line" denotes an arrangement in an end office which provides an ac circuit termination of a trunk or line by means of an inductor of several Henries.

TARIFF BRANCH
RECEIVED
7/17/2006
PUBLIC SERVICE
COMMISSION
OF KENTUCKY

ISSUED: JULY 17, 2006
BY: Vice President
Lexington, Kentucky

EFFECTIVE: AUGUST 1, 2006

ACCESS SERVICE

2. General Regulations (Cont'd)

2.6 Definitions (Cont'd)

Originating Direction

The term "Originating Direction" denotes the use of access service for the origination of calls from an End User Premises to an IC Premises.

Pay Telephone

The term "Pay Telephone" denotes Company provided instruments and related facilities that are available to the general public for public convenience and necessity, including public and semipublic telephones, and coinless telephones.

Phase Jitter

The term "Phase Jitter" denotes the unwanted phase variations of a signal.

Point of Termination

The term "Point of Termination" denotes the point of demarcation at a customer-designated premises at which the Company's responsibility for the provision of Access Service ends.

Premises

The term "Premises" denotes a building or buildings on continuous property (except Railroad Right-of-Way, etc.) not separated by a public highway.

Release Message

The term "Release Message" denotes an SS7 Message sent in either direction to indicate that specific circuit is being released.

Remote Switching Modules and/or Remote Switching Systems

The term "Remote Switching Modules and/or Remote Switching Systems" denotes remotely controlled electronic end office switches which obtain their call processing capability from an ESS-type Host Office. The Remote Switching Modules and/or Remote Switching Systems cannot accommodate direct trunks to an IC.

Return Loss

The term "Return Loss" denotes a measure of the similarity between the two impedances at the junction of two transmission paths. The higher the return loss, the higher the similarity.

TARIFF BRANCH
RECEIVED
7/17/2006
PUBLIC SERVICE
COMMISSION
OF KENTUCKY

ISSUED: JULY 17, 2006
BY: Vice President
Lexington, Kentucky

EFFECTIVE: AUGUST 1, 2006

ACCESS SERVICE

2. General Regulations (Cont'd)

2.6 Definitions (Cont'd)

Registered Equipment

The term "Registered Equipment" denotes the customer's premises equipment which complies with and has been approved within the Registration Provisions of Part 68 of the FCC's Rules and Regulations.

Serving Wire Center

The company designated wire center serving the customer's designated premises and used for mileage measurement to determine local transport or circuit mileage charges for Access Service.

Seven Digit Manual Test Line

The term "Seven Digit Manual Test Line" denotes an arrangement which allows the Customer to select balance, milliwatt and synchronous test lines by manually dialing a seven digit number over the associated access connection.

Shortage of Facilities or Equipment

The term "Shortage of Facilities or Equipment" denotes a condition which occurs when the Company does not have appropriate cable, switching capacity, bridging or, multiplexing equipment, etc., necessary to provide the Access Service requested by the customer.

Short Circuit Test Line

The term "Short Circuit Test Line" denotes an arrangement in an end office which provides for an ac short circuit termination of a trunk or line by means of a capacitor of at least four microfarads.

Signal-to-C-Notched Noise Ratio

The term "Signal-to-C-Notched Noise Ratio" denotes the ratio in dB of a test signal to the corresponding C-Notched Noise.

Signaling System 7 (SS7)

The term "Signaling System 7 (SS7)" denotes the layered protocol used for standardized common channel signaling in the United States.

Signal Transfer Point (STP)

The term "Signal Transfer Point (STP)" denotes a packet switch which provides access to the Telephone Company's SS7 network and performs SS7 message signal routing and screening. The technical interface specifications, transmission specifications, and diversity requirements for interconnecting to the Telephone Company's SS7 network at the STP are as described in Bellcore Technical Reference Publication TR-TSV-000905.

TARIFF BRANCH
RECEIVED
7/17/2006
PUBLIC SERVICE
COMMISSION
OF KENTUCKY

ACCESS SERVICE

2. General Regulations (Cont'd)

2.6 Definitions (Cont'd)

Signal Transfer Point (STP) Port

The term "Signal Transfer Point (STP) Port" denotes the physical point of termination and interconnection to the STP.

Singing Return Loss

The term "Sin`ging Return Loss" denotes the frequency weighted measure of return loss at the edges of the voiceband (200 to 500 Hz and 2500 to 3200 Hz), where singing (instability) problems are most likely to occur.

Subtending End Office of An Access Tandem

The term "Subtending End Office of an Access Tandem" denotes an end office that has final trunk group routing through that tandem.

Synchronous Test Line

The term "Synchronous Test Line" denotes an arrangement in an end office which performs marginal operational tests of supervisory and ring-tripping functions.

Terminating Direction

The term "Terminating Direction" denotes the use of Access Service for the completion of calls from an IC premises to an End User Premises.

Toll VoIP-PSTN Traffic (N)

The term "Toll VoIP-PSTN Traffic" denotes a customer's interexchange voice traffic exchanged with the Telephone Company in Time Division Multiplexing format over PSTN facilities, which originates and/or terminates in Internet Protocol (IP) format. "Toll VoIP-PSTN Traffic" originates and/or terminates in IP format when it originates from and/or terminates to an end user customer of a service that requires IP-compatible customer premises equipment. (N)

Transmission Measuring (105 Type) Test Line/Responder

The term "Transmission Measuring (105 Type) Test Line/Responder" denotes an arrangement in an end office which provides fat-end access to a responder and permits two-way loss and noise measurements to be made on trunks from a near end office.

Transmission Path

The term "Transmission Path" denotes an electrical path capable of transmitting signals within the range of the service offering, e.g., a voice grade transmission path is capable of transmitting voice frequencies within the approximate range of 300 to 3000Hz. A transmission path is comprised of physical or derived facilities consisting of any form or configuration of plant typically used in the telecommunications indus

KENTUCKY
PUBLIC SERVICE COMMISSION
JEFF R. DEROUEN
EXECUTIVE DIRECTOR
TARIFF BRANCH
Bunt Kirtley
EFFECTIVE
1/7/2012
PURSUANT TO 807 KAR 5:011 SECTION 9 (1)

Information previously found on this page now found on Page 49.

ISSUED: December 23, 2011
BY: Vice President
Lexington, Kentucky

EFFECTIVE: January 7, 2012

ACCESS SERVICE

2. General Regulations (Cont'd)

2.6 Definitions (Cont'd)

Trunk (M)

The term "Trunk" denotes a communications path connecting two switching systems in a network, used in the establishment of an end-to-end connection.

Trunk Group

The term "Trunk Group" denotes a set of trunks which are traffic engineered as a unit for the establishment of connections between switching systems in which all of the communications paths are interchangeable. (M)

Trunk Side Connection

The term "Trunk Side Connection" denotes the connection of a transmission path to the trunk side of a local exchange switching system.

Two-Wire to Four-Wire Conversion

The term "Two-Wire to Four-Wire Conversion" denotes an arrangement which converts a four-wire transmission path to a two-wire transmission path to allow a four-wire facility to terminate to a two-wire entity (e.g., a central office switch).

Uniform Service Order Code

The term "Uniform Service Order Code" denotes a three or five character alphabetic, numeric, or an alphanumeric code that identifies a specific item of service or equipment. Uniform Service Order Codes are used in the Company billing system to generate recurring rates and nonrecurring charges.

V&H Coordinates

The term "V and H Coordinates Method" denotes a method of computing airline miles between two points by utilizing an established formula which is based on the vertical and horizontal coordinates of the two points.

WATS Serving Office

The term "WATS Serving Office" denotes a Company switching office capable of performing the optional screening functions used in Switched Access Interface.

Wire Center

The term "Wire Center" denotes (1) a building in which one or more central offices, including end office switches, used for the provision of Telephone Exchange Services, are located, or (2) in the case of a centralized equal access tandem arrangement, a building in which Company access facilities are located for purposes of interconnection to customer premises.

KENTUCKY
PUBLIC SERVICE COMMISSION
JEFF R. DEROUEN
EXECUTIVE DIRECTOR
TARIFF BRANCH
Bunt Kirtley
EFFECTIVE
1/7/2012
PURSUANT TO 807 KAR 5:011 SECTION 9 (1)

(M) Moved from page 48

ISSUED: JULY 17, 2006
BY: Vice President
Lexington, Kentucky

EFFECTIVE: AUGUST 1, 2006

ACCESS SERVICE

3. Carrier Common Line Access Services

The Company will provide Carrier Common Line Access Service (Carrier Common Line Access) to customers in conjunction with Switched Access Service provided in Section 6. of this tariff.

The Switched Access Service associated with Carrier Common Line Access shall be ordered by the customer in accordance with regulations set forth in Section 5 following.

3.1 General Description

Carrier Common Line Access provides for the use of end users' Company provided common lines by customers for access to such end users to furnish Intrastate Communications at rates and charges set forth in 3.7.1 following. The customer facilities at the premises of the ordering customer shall provide the necessary on-hook and off-hook supervision.

Premium Access is (1) Switched Access Service provided to customers under this tariff which furnish intrastate MTS/WATS, (2) Switched Access Service in an end office converted to equal access.

Non Premium Access is Switched Access Service provided in an end office not yet converted to equal access to customers that do not furnish intrastate MTS/WATS.

A Special Access Surcharge will apply to intrastate Special Access Service provided by the Company to a customer, in accordance with rates and regulations as set forth in 7.2.1(E) following.

TARIFF BRANCH
RECEIVED
7/17/2006
PUBLIC SERVICE
COMMISSION
OF KENTUCKY

ISSUED: JULY 17, 2006
BY: Vice President
Lexington, Kentucky

EFFECTIVE: AUGUST 1, 2006

ACCESS SERVICE

3. Carrier Common Line Access Services (Cont'd)

3.2 Limitations

(A) A telephone number is not provided with Carrier Common Line Access.

(B) Detail billing is not provided for Carrier Common Line Access.

(C) Directory listings are not included in the rates and charges for Carrier Common Line Access.

(D) Intercept arrangements are not included in the rates and charges for Carrier Common Line Access.

(E) All line side connections provided in the same access group will be limited to the same features and operating characteristics.

(F) All trunk side connections provided in the same combined access group will be limited to the same features and operating characteristics.

TARIFF BRANCH
RECEIVED
7/17/2006
PUBLIC SERVICE
COMMISSION
OF KENTUCKY

ISSUED: JULY 17, 2006
BY: Vice President
Lexington, Kentucky

EFFECTIVE: AUGUST 1, 2006

ACCESS SERVICE

3. Carrier Common Line Access Services (Cont'd)

3.3 Undertaking of the Telephone Company

3.3.1 Where the customer is provided with Switched Access Service under other sections of this tariff, the Telephone Company will provide the use of Telephone Company common lines by a customer for access to end users at rates and charges as set forth in 3.8 following.

3.3.2 Where the customer is reselling MTS and/or MTS-type service(s) on which the Carrier Common Line and Switched Access charges have been assessed, the customer may, at the option of the customer, obtain Feature Group A, Feature Group B or Feature Group D Switched Access Service under this tariff as set forth in Section 4 for originating and/or terminating access in the local exchange. Such access group arrangements whether single lines or trunks or multiline hunt groups or trunk groups will have Carrier Common Line Access Charges applies as set froth in 3.8 following in accordance with the regulations set forth in 3.7.3 following. For purposes of administrating this provision:

Resold intrastate inward MTS and MTS-type service(s) shall include collect calls, third number calls and credit card calls where the reseller pays the underlying carrier's service charges; and shall not include interstate minutes of use.

Resold intrastate outward MTS and MTS-type service(s) shall not include collect, third number, credit card of interstate minutes of use.

3.3.3 When access to the local exchange is required to provide a customer service (e.g., MTS/WATS-type, telex, Data, etc.) that uses a resold Private Line Service, Switched Access Service Rates and Regulations, as set forth in 4. will apply, except when such access to the local exchange is required for the provision of an enhanced service. Carrier Common Line Access rates and charges as set forth in 3.8 following apply in accordance with the regulations as set forth in 3.7 following.

TARIFF BRANCH
RECEIVED
7/17/2006
PUBLIC SERVICE
COMMISSION
OF KENTUCKY

ISSUED: JULY 17, 2006
BY: Vice President
Lexington, Kentucky

EFFECTIVE: AUGUST 1, 2006

ACCESS SERVICE

3. Carrier Common Line Access Services (Cont'd)

3.3 Undertaking of the Telephone Company(Cont'd)

3.3.4 The Switched Access Service provided by the Telephone Company includes the Switched Access Service provided for intrastate communications and the Carrier Common Line Access rates and charges as set forth in 3.8 following apply in accordance with the regulations as set forth in 3.7 following.

3.3.5 When the IC is provided Operator Trunk-Coin or Combined Coin and Non-Coin or Operator Trunk-Full Features Optional Features for sent-paid pay telephone access as set forth in 4. preceding, the Telephone Company will collect sent-paid monies from pay telephone stations and will remit monies to the IC as set forth in 3.5 following. The Telephone Company will provide message call detail format and bill periods used to determine the monies upon request for the IC.

3.4 Obligation of the Customer

3.4.1 The Switched Access Service associated with Carrier Common Line Access shall be ordered by the customer under other sections of this tariff.

3.4.2 The customer facilities at the premises or ordering customer shall provide the necessary on-hook and off-hook supervision.

3.4.3 Unless the IC reports (1) intrastate use as set forth in 3.4.4 following or (2) Feature Group A, B or D, Switched Access Service as set forth in 3.4.6 following, all Switched Access Service provided to the customer will be subject to Carrier Common Line Access charges.

3.4.4 When the customer reports interstate and intrastate use of Switched Access Service the associated Carrier Common Line Access used by the customer for intrastate will be determined as set forth in 3.8 following.

The customer will provide a report indicating separate common line information for 500, 700, 800, 877, 888 and 900 access minutes, at a statewide level and by jurisdiction. This report shall also include the applicable Access Customer Name Abbreviation [ACNA(s)].

TARIFF BRANCH
RECEIVED
7/17/2006
PUBLIC SERVICE
COMMISSION
OF KENTUCKY

ISSUED: JULY 17, 2006
BY: Vice President
Lexington, Kentucky

EFFECTIVE: AUGUST 1, 2006

ACCESS SERVICE

3. Carrier Common Line Access Services (Cont'd)

3.4 Obligation of the Customer (Cont'd)

3.4.5 Where Feature Group C end office switching is provided without Telephone Company recording and the IC records minutes of use which will be used to determine Carrier Common Line Access charges (i.e., Feature Group C operator and TSPS calls such as pay telephone sent-paid, operator-DDD, operator-person, collect, credit card, third number and/or other like calls), the IC shall furnish such minutes of use detail to the Telephone Company (billing entity) in a timely manner. If the IC does not furnish the data to the Telephone Company, the IC shall identify all Switched Access Services which could carry such calls in order to accumulate the minutes of use through the use of special Telephone Company measuring and recording equipment.

3.4.6 When the customer is reselling MTS and/or MTS-type service as set forth in 3.3.2 preceding, the customer will be charged the Carrier Common Line Access charges in accordance with the regulations as set forth in 3.7.4 following if the customer or the provider of the MTS service furnishes documentation of the MTS usage and/or the customer furnishes documentation of the MTS-type usage. Such documentation supplied by the customer shall be supplied each month and shall identify the involved resold MTS and/or MTS-type services. The monthly period used to determine the minutes of use for resold MTS and/or MTS-type service(s) shall be the most recent monthly period for which the customer has received a bill for such resold MTS and/or MTS-type service(s). This information shall be delivered to the Telephone Company, at a location specified by the Telephone Company, no later than 15 days after the bill date shown on the resold MTS and/or MTS-type service bill. If the required information is not received by the Telephone Company, the previously reported information, as described preceding, will be used for the next two months. For any subsequent month, no allocation or credit will be made until the required documentation is delivered to the Telephone Company by the customer.

TARIFF BRANCH
RECEIVED
7/17/2006
PUBLIC SERVICE
COMMISSION
OF KENTUCKY

ISSUED: JULY 17, 2006
BY: Vice President
Lexington, Kentucky

EFFECTIVE: AUGUST 1, 2006

ACCESS SERVICE

3. Carrier Common Line Access Services (Cont'd)

3.4 Obligation of the Customer (Cont'd)

3.4.7 When the customer orders Switched Access Service as set forth in 3.4.6 preceding, the Telephone Company or the billing entity may request when resold MTS is involved, a certified copy of the customer's MTS usage billing from either the customer or the provider of the MTS Service and/or when resold MTS-type service is involved, a certified copy of customer's MTS-type usage billing from either the customer or the provider of the MTS-type service. The requests for billing will relate back no more than 12 months prior to the current billing period.

3.4.8 Where Operator Trunk-Coin or Combined and Non-Coin or Operator Trunk-Full Feature Arrangements for sent-paid pay telephone access are provided to the IC and the IC wishes to receive the monies it is due for the monies collected by the Telephone Company from coin pay telephone stations, the IC shall furnish to the Telephone Company, at a location specified by the Telephone Company, the IC message call detail for the IC sent-paid (coin) pay telephone calls in accordance with the Telephone Company collection schedule. The IC message call detail furnished shall be in a standard format established by the Telephone Company. If no IC message call detail is received from the IC for each bill period established by the Telephone Company, the Telephone Company will assume there were no IC sent-paid (coin) pay telephone calls for the period. In addition, the IC shall furnish a schedule of its charges for sent-paid (coin) calls to the Telephone Company at a location and data as specified by the Telephone Company. Any change in the IC's schedule of charges shall be furnished to the Telephone Company one day after the change becomes effective.

3.5 Payment Arrangements

The Telephone Company will bill the Carrier Common Line Access. The regulations as set forth in 2.4.1 preceding apply to Carrier Common Line Access Service for payment of rates, charges and deposits.

TARIFF BRANCH
RECEIVED
7/17/2006
PUBLIC SERVICE
COMMISSION
OF KENTUCKY

ISSUED: JULY 17, 2006
BY: Vice President
Lexington, Kentucky

EFFECTIVE: AUGUST 1, 2006

ACCESS SERVICE

3. Carrier Common Line Access Services (Cont'd)

3.6 Payment of Coin Sent-Paid Monies

The telephone Company will collect the monies from coin pay telephone stations and will determine and remit amounts due to an IC which is provided Operator Trunk-Coin or combined coin and Non-coin or Operator Trunk-Full Feature Arrangements for sent-paid pay telephone access as set forth in 3.6.4 as follows:

3.6.1 Bill Period Coin Revenue

The Telephone Company will establish a collection schedule for each coin pay telephone station and will collect the monies from the coin pay telephone stations based on this collection schedule. The monies collected based on this schedule during each bill period established by the Telephone Company will be identified by coin pay telephone and summed to develop the Bill Period Coin Revenue for each coin record day (i.e., the day a record is prepared and dated to show the amount due the IC).

3.6.2 Total IC Coin Revenue

The intrastate Total IC Coin Revenue will be determined by the Telephone Company based on the customer message call detail received from the customer for each bill period and the IC's schedule of charges for sent-paid coin calls. Such Total Customer Coin Revenue will be developed each coin record day.

3.6.3 Recourse Adjustments

For each bill period, the Telephone Company will subtract from the Total IC Coin Revenue an amount for coin station shortages. Coin station shortages are amounts resulting from unauthorized calling at coin pay telephones, use of unauthorized coins (i.e., foreign coins, slugs and improper use of U.S. pennies), unauthorized removal of coins from coin pay telephone stations and coin refunds beyond the Telephone Company's control. Such amount for coin station shortages will be developed by the Telephone Company by multiplying the Total IC Coin Revenue for each bill period by shortage factor. Such amounts will be rounded to the nearest penny.

TARIFF BRANCH
RECEIVED
7/17/2006
PUBLIC SERVICE
COMMISSION
OF KENTUCKY

ISSUED: JULY 17, 2006
BY: Vice President
Lexington, Kentucky

EFFECTIVE: AUGUST 1, 2006

ACCESS SERVICE

3. Carrier Common Line Access Services (Cont'd)

3.6 Payment of Coin Sent-Paid Monies (Cont'd)

3.6.3 Recourse Adjustments (Cont'd)

The shortage factor will be determined by dividing the yearly total coin shortage amount by the yearly total coin revenue amount (i.e., total coin revenue equals the coin revenue due under exchange tariffs, state toll tariffs, and intrastate toll tariffs). The total coin shortage amount and the total revenue amount will be determined by the Telephone Company through an annual special study.

3.6.4 Payment of Net IC Coin Revenue

The Telephone Company will determine the Net IC Coin Revenue for each bill period by subtracting from the Total IC Coin Revenue determined as set forth in 3.6.2 preceding the amount for coin station shortages determined as set forth in 3.6.3 preceding. The Telephone Company will remit payment to the IC for the Net IC Coin Revenue on a monthly basis for all coin bill periods within that month.

3.6.5 Audit Provisions

Upon reasonable written notice by the IC to the Telephone Company, the IC shall have the right, through its authorized representative, to examine and audit, during normal business hours and at reasonable intervals as determined by the Telephone Company, all such records and accounts as may under recognized accounting practices contain information bearing upon the determination of coin revenues for which amounts may be payable to the IC. Adjustments shall be made by the proper party to compensate for any errors or omissions disclosed by such examination or audit. Neither such right to examine and audit nor the right to receive such adjustment shall be affected by any statement to the contrary, appearing on checks or otherwise, unless such statement expressly waiving such right appears in a letter signed by the authorized representative of the party have such right and delivered to the other party.

All information received or reviewed by the IC or its authorized representative is to be considered confidential and is not to be distributed, provided or disclosed in any form to anyone not involved in the audit, nor is such information to be used for any other purpose.

TARIFF BRANCH
RECEIVED
7/17/2006
PUBLIC SERVICE
COMMISSION
OF KENTUCKY

ISSUED: JULY 17, 2006
BY: Vice President
Lexington, Kentucky

EFFECTIVE: AUGUST 1, 2006

ACCESS SERVICE

3. Carrier Common Line Access Services (Cont'd)

3.7 Rate Regulations

3.7.1 The Carrier Common Line Charge will be billed to each Switched Access Service provided under this tariff in accordance with the regulations as set forth in 3.8 following, except as set forth in 3.7.3 and 3.7.4 following.

3.7.2 When Carrier Common Line Access is provided in association with Feature Group A or Feature Group B Switched Access Service in Telephone Company offices that are not equipped for measurement capabilities, an assumed average intrastate access minute will be used to determine the charge. These assumed access minutes are as set forth in Section 4.

3.7.3 When the customer is provided an access group to be used in conjunction with the resale of MTS and/or MTS-type services as set forth in 3.3.2 preceding, subject to the limitations of Carrier Common Line as set forth in 3.2 preceding, and the billing entity receives the usage information required to calculate the proration of Carrier Common Line as set forth in 3.4.6 preceding, the customer will be billed as set forth in the following.

TARIFF BRANCH
RECEIVED
7/17/2006
PUBLIC SERVICE
COMMISSION
OF KENTUCKY

ISSUED: JULY 17, 2006
BY: Vice President
Lexington, Kentucky

EFFECTIVE: AUGUST 1, 2006

ACCESS SERVICE

3. Carrier Common Line Access Services (Cont'd)

3.7 Rate Regulations (Cont'd)

3.7.3 (Cont'd)

When the customer is provided with more than one access group in a LATA in association with the resale of MTS and/or MTS-type services, the resold minutes of use will be apportioned as follows:

The filling entity will apportion the resold outward MTS and/or MTS-type services and originating minutes of use for which resale credit applies, amount the access groups. Such apportionment will be based on the relationship of the originating usage for each access group to the total originating usage for all access groups in the LATA. For purposes of administering this provision:

Resold outward MTS and/or MTS-type services minutes shall be only those attributable to interstate outward MTS and/or MTS-type minutes and shall not include collect, third number, credit card or interstate minutes of use.

The resale credit shall apply for resold outward MTS and MTS-type services and minutes of use, provided Carrier Common Line and Switched Access Charges have been assessed on such services.

The billing entity will apportion the resold inward MTS and/or MTS-type services and terminating minutes of use for which resale credit applies, among the access groups. such apportionment will be based on the relationship of the termination usage for each access group to the total terminating usage for all access groups in the LATA. For purposes of administering this provision:

Resold inward MTS and/or MTS-type services minutes shall be only those attributable to intrastate inward MTS/MTS-type (i.e., collect calls, third number calls, and credit card calls) and shall not include interstate minutes of use or MTS/MTS-type minutes of use paid for by another party.

The resale credit shall apply for resold inward MTS and MTS-type services and minutes of use, provided Carrier Common Line and Switched Access Charges have been assessed on such services.

TARIFF BRANCH
RECEIVED
7/17/2006
PUBLIC SERVICE
COMMISSION
OF KENTUCKY

ISSUED: JULY 17, 2006
BY: Vice President
Lexington, Kentucky

EFFECTIVE: AUGUST 1, 2006

ACCESS SERVICE

3. Carrier Common Line Access Services (Cont'd)

3.7 Rate Regulations (Cont'd)

3.7.3 (Cont'd)

In order for the rate regulation to apply as set forth following, the access groups and the resold MTS and/or MTS-type services must be provided in the same state in the same exchange, provided by the same Telephone Company and connected directly or indirectly. For those exchanges that encompass more than one state, the customer shall report the information by state within the exchange.

Each of the access group arrangement used by the customer in association with the resold MTS and/or MTS-type services must be connected either directly or indirectly to the customer designated premises at which the resold MTS and/or MTS-type services are terminated. Direct connections are those arrangements where the access groups and resold MTS and/or MTS-type services are terminated at the same customer designated premises.

Indirect outward connections are those arrangements where the access groups and the resold outward MTS and/or MTS-type services are terminated at different customer designated premises in the same exchange. Such different customer designated premises are connected by facilities that permit a call to flow from access groups to resold MTS and/or MTS-type services.

Indirect inward connections are those arrangements where the access groups and resold inward MTS and/or MTS-type services are terminated at different customer designated premises in the same exchange. Such different customer designated premises are connected by facilities that permit a call to flow from resold inward MTS and/or MTS-type services to access groups.

The adjustments as set forth following will be computed separately for each access group.

TARIFF BRANCH
RECEIVED
7/17/2006
PUBLIC SERVICE
COMMISSION
OF KENTUCKY

ACCESS SERVICE

3. Carrier Common Line Access Services (Cont'd)

3.7 Rate Regulations (Cont'd)

3.7.4 When the customer reports intrastate and interstate use of in-service Switched Access Service, the Carrier Common Line Access Charges will be billed only to intrastate Switched Access Service Lines, trunks or access minutes based on the data reported by the customer as set forth in 6.5.5 following. For purposes of application of the monthly charge per access line, the terminating rated minutes will include all originating access minutes of use associated with calls placed to 700, 800, 877, 888 or 900 numbers which are rated as terminating traffic. Originating access minutes of use associated with calls placed to 700, 800, 877, 888 or 900 numbers for which the customer furnishes a report of either the number of minutes or a report of the percent of minutes that terminate to a subscriber or common line, rather than a dedicated access line are not included in the terminating minutes of use. The intrastate Switched Access Service lines, trunks or access minutes will, after adjustment as set forth in 3.7.3 preceding, when necessary, be used to determine the Carrier Common Line Charge as set forth in 3.8 following.

3.8 Rates and Charges

The monthly rate for Carrier Common Line Service is:

		Monthly Rate	
(1)	Per access line	$0.0000	(R)

(A) Flat Rate Charge Development

C = Annual non-traffic sensitive costs.

Qtot = Mid-test year total number of access lines applicable to MTS charge. For purposes of this calculation, "access lines" will be defined as message telephone cost loops per Parts 67 and 69 of the FCC's Rules and Regulations.

(B) Monthly Charge per Access Line = $\frac{C}{(Qtot * 12)}$

KENTUCKY
PUBLIC SERVICE COMMISSION
JEFF R. DEROUEN
EXECUTIVE DIRECTOR
TARIFF BRANCH
Bunt Kirtley
EFFECTIVE
7/1/2013
PURSUANT TO 807 KAR 5:011 SECTION 9 (1)

ISSUED: JULY 17, 2006
BY: Vice President
Lexington, Kentucky

EFFECTIVE: AUGUST 1, 2006

ACCESS SERVICE

3. Carrier Common Line Access Services (Cont'd)

3.8 Rate and Charges (Cont'd)

(C) Allocation of Access Lines Among Carriers

For purposes of application of the monthly charge per access line, the total number of access lines must be allocated among all carriers. The terminating rated minutes will include originating access minutes of use associated with calls placed to Service Access Code numbers which terminate to dedicated access lines.

MOU_x = Total terminating premium access minutes of use for carrier X.

MOU_{tot} = Total terminating premium access minutes of use for all carriers.

Number of Access Lines for Carrier X =

$$\frac{MOUx * Qtot}{MOUtot}$$

(This step is to be completed for each carrier).

This process will be performed monthly based on the relationship of each carrier's terminating minutes of use to the total terminating minutes of use from the previous month.

TARIFF BRANCH
RECEIVED
7/17/2006
PUBLIC SERVICE
COMMISSION
OF KENTUCKY

ISSUED: JULY 17, 2006
BY: Vice President
Lexington, Kentucky

EFFECTIVE: AUGUST 1, 2006

ACCESS SERVICE

4. End User Access Service

The Company will provide End User Access Service (End User Access) to end users who obtain local exchange service from the Company under its general and/or local exchange tariffs.

4.1 General Description

End User Access provides for the use of an End User Common Line (EUCL).

4.2 Limitations

(A) Exclusions

Neither a telephone number nor detail billing is provided with End User Access. Directory listings and Intercept arrangements are not included with End User Access.

4.3 Undertaking of the Company

The Company will provide End User Access at rates and charges as set forth in 4.7.1 through 4.7.4 following, as follows:

- Use of an EUCL by an end user in connection with intrastate Access Service provided under this tariff. Such use will be provided when the end user obtains local exchange service.

- The Company will be responsible for contacts and arrangements with customers for the billing of End User Access charges.

4.4 Obligations of Radio Common Carriers

When the end user is a Radio Common Carrier (RCC) or provider of paging service, such as end users shall designate whether the local exchange service they are provided by the Company is used as an access line for RCC or paging services, or used as an administrative line.

TARIFF BRANCH
RECEIVED
7/17/2006
PUBLIC SERVICE
COMMISSION
OF KENTUCKY

ISSUED: JULY 17, 2006
BY: Vice President
Lexington, Kentucky

EFFECTIVE: AUGUST 1, 2006

ACCESS SERVICE

4. End User Access Service (Cont'd)

4.5 Payment Arrangements and Credit Allowances

4.5.1 Minimum Period

The minimum period for which EUCL End User Access is provided to an end user and for which charges are applicable is the same as that in the general and/or local exchange tariffs for the associated local exchange service.

4.5.2 Cancellation of Orders

End User Access is canceled when the order for the associated local telephone exchange service is cancelled. No cancellation charges apply.

4.5.3 Changes to Orders

When changes are made to orders for the local exchange service associated with End User Access, any necessary changes will be made for End User Access. No charges will apply.

4.5.4 Allowance for Interruptions

When there is an interruption to an EUCL, requested End User Access credit allowance for interruptions will be provided as set forth for credit allowance for interruptions in 2.4.4 preceding.

4.5.5 Temporary Suspension of Service

When an end user temporarily suspends its local exchange service which is associated with EUCL, one-half of the EUCL per month charge will be temporarily suspended for the time period the local exchange service is suspended.

TARIFF BRANCH
RECEIVED
7/17/2006
PUBLIC SERVICE
COMMISSION
OF KENTUCKY

ISSUED: JULY 17, 2006
BY: Vice President
Lexington, Kentucky

EFFECTIVE: AUGUST 1, 2006

ACCESS SERVICE

4. End User Access Service (Cont'd)

4.6 Rate Regulations

4.6.1 Who is Billed

EUCL per month charges will be billed to the end user of the associated Local Exchange Service.

4.6.2 Multiparty Service

The EUCL charge for each multiparty subscriber shall be assessed as if such subscriber had subscribed to single party service.

4.6.3 Semi-Public Service

For the purposes of the EUCL charge, a semi-public service shall be deemed to be the same as a business line if the subscriber pays a rate that is not described as a residential rate in the local exchange tariff.

4.6.4 Business Services

(A) Single Line Service

When an end user is provided a single local business exchange service in a state, semi-public service and multiparty service included, and when this local business exchange service is provided under the general and/or local exchange service tariffs, the EUCL Single Line Business - Individual line or trunk rate as set forth in 4.7.2 following, applies to each such business individual line or trunk. In the case of multiparty service each party is deemed to be a user of an EUCL.

(B) Multiline Service

When an end user is provided more than one local business exchange service in a state by the same Company, semi-public service and multiparty service included, and when a local exchange service is provided under the general and/or local exchange service tariffs that is not covered by (C) following (Centrex), the EUCL Multiline Business - Individual line or trunk rate as set forth in 4.7.2 following, applies to each such business individual line or trunk. In the case of multiparty service each party is deemed to be a user of an EUCL.

TARIFF BRANCH
RECEIVED
7/17/2006
PUBLIC SERVICE
COMMISSION
OF KENTUCKY

ISSUED: JULY 17, 2006
BY: Vice President
Lexington, Kentucky

EFFECTIVE: AUGUST 1, 2006

ACCESS SERVICE

4. End User Access Service (Cont'd)

4.6 Rate Regulations (Cont'd)

4.6.4 Business Services (Cont'd)

(C) Centrex CO and Centrex CO-like Services

For business Centrex CO and business Centrex CO-like service lines or trunks, the EUCL-Centrex CO rate as set forth in 4.7.4 following applies to each business line or trunk.

Centrex CO is a service that (1) uses a portion of a Company switch located at the Company central office to meet the customer's internal needs and serves as the customer's interface with the local and interexchange networks and (2) links the customer's main stations to the Company switch with subscriber loops.

Centrex CO-like services are services (e.g., ESSX, Centron, Centraflex, Airport Service, Hotel-Motel Service) that operate in a manner that is substantially the same as Centrex CO and (1) are provided using switches located at Company central offices and (2) link customer main stations to the Company switch with subscriber loops.

Centrex CO and CO-like service provided to a college, university or school may serve both the college, university or school offices and the student or faculty dormitory (residential) quarters. When provided to a residential quarters, the residential portion of the service is commonly known as dormitory service. Residential charges will apply to lines to the student faculty dormitory (residential) quarters as set forth in 4.7.3 following. Business charges for lines to the university, college or school offices will apply as set forth in 4.7.4 following. Charges shall be based on the number of residence and business lines reported to the Company by the end user.

TARIFF BRANCH
RECEIVED
7/17/2006
PUBLIC SERVICE
COMMISSION
OF KENTUCKY

ISSUED: JULY 17, 2006
BY: Vice President
Lexington, Kentucky

EFFECTIVE: AUGUST 1, 2006

ACCESS SERVICE

4. End User Access Service (Cont'd)

4.6 Rate Regulations (Cont'd)

4.6.5 Radio Common Carriers

End User Access charges do not apply for each local exchange service used only as a path for the transmission of Radio Common Carrier (RCC) traffic between the Company serving wire center and the RCC's radio equipment.

End User Access Charges will apply to the Radio Common Carrier's local exchange service used for administrative purposes. This shall also include those Radio Common Carriers providing maritime service under Part 81 of the FCC Rules and Regulations.

A Radio Common Carrier is described as a common carrier engaged in the provision of Public Mobile Service, (as defined in Part 22 of the FCC Rules and Regulations), which is not also in the business of providing landline local exchange telephone service.

4.6.6 Remote Call Forwarding

End User Access charges do not apply for each local exchange service provided as Remote Call Forwarding (RCF) residential or business service, under the local exchange service tariffs.

TARIFF BRANCH
RECEIVED
7/17/2006
PUBLIC SERVICE
COMMISSION
OF KENTUCKY

ISSUED: JULY 17, 2006
BY: Vice President
Lexington, Kentucky

EFFECTIVE: AUGUST 1, 2006

ACCESS SERVICE

4. End User Access Service (Cont'd)

4.6 Rate Regulations (Cont'd)

4.6.7 Residence Services

(A) Single Line and Multiline Service

When an end user is provided local residence exchange service(s) in a state, semi-public service and multiparty service included, and when the local residence exchange service is provided under the general and/or local exchange service tariffs, the EUCL Residence - Individual line or trunk rate as set forth in 4.7.1 following, applies to each such local residence exchange service. In the case of multiparty service each party is deemed to be a user of an EUCL.

(B) Centrex CO and CO-like Dormitory Service

Regulations concerning the application of EUCL charges to student or faculty dormitory (residential) quarters served by Centrex CO or CO-like service are set forth in 4.6.4(C) preceding.

TARIFF BRANCH
RECEIVED
7/17/2006
PUBLIC SERVICE
COMMISSION
OF KENTUCKY

ISSUED: JULY 17, 2006
BY: Vice President
Lexington, Kentucky

EFFECTIVE: AUGUST 1, 2006

ACCESS SERVICE

4. End User Access Service (Cont'd)

4.7 Rates and Charges

4.7.1 End User Common Line (EUCL) Residence

Per Individual Line or Trunk

Monthly Rate	$0.00

4.7.2 End User Common Line (EUCL) Single Line Business

Per Individual Line or Trunk

Monthly Rate	$0.00

4.7.3 End User Common Line (EUCL) Centrex CO and CO-Like Dormitory Service

Per Individual Line or Trunk

Monthly Rate	$0.00

4.7.4 End User Common Line (EUCL) Multiline Business Including Centrex CO and CO-Like Service

Per Individual Line or Trunk

Monthly Rate	$0.00

TARIFF BRANCH
RECEIVED
7/17/2006
PUBLIC SERVICE
COMMISSION
OF KENTUCKY

ISSUED: JULY 17, 2006
BY: Vice President
Lexington, Kentucky

EFFECTIVE: AUGUST 1, 2006

ACCESS SERVICE

5. Ordering Switched and Special Access Service

This section sets forth the regulations and order related charges for Access Orders for Switched and Special Access Services. These charges are in addition to other applicable charges as set forth in other sections of this tariff.

5.1 Access Service Request Requirements

An Access Service Request (ASR) is used by the Company to provide the customer with Switched Access Service as set forth in 6. following, and Special Access Service as set forth in 7. following or to provide changes to existing services.

When placing an order for Access Services, the customer must complete a Company Access Service Request and shall provide the information as required in 5.1.1, 5.1.2, and 5.1.3 following.

5.1.1 General

A customer may order any number of services of the same type and between the same premises on a single Access Service Request. All details for services for a particular order must be identical except for those for multipoint service.

A customer may order access service on behalf of the customer's end user. The customer must provide the Company all the necessary information as set forth in this section.

The customer shall provide all information necessary for the Company to provide and bill for the requested service. In addition to the order information required in 5.1.2 and 5.1.3 following, the customer must also provide:

- Customer name and premises address(es)

- Billing name and address (when different from customer name and address).

- Customer contact name(s) and telephone number(s) for the following provisioning activities: order negotiation, order confirmation, interactive design, installation and billing.

TARIFF BRANCH
RECEIVED
7/17/2006
PUBLIC SERVICE
COMMISSION
OF KENTUCKY

ISSUED: JULY 17, 2006
BY: Vice President
Lexington, Kentucky

EFFECTIVE: AUGUST 1, 2006

ACCESS SERVICE

5. Ordering Switching and Special Access Service (Cont'd)

5.1 Access Service Request Requirements (Cont'd)

5.1.2 Switched Access Ordering Requirements

Switched Access Service may be ordered by the customer on the basis of line-side or trunk-side access connections at Company locations. Trunk side ordering regulations are set forth in 5.1.2(A) following. Line side ordering regulations are as set forth in 5.1.2(B) following.

(A) Trunk Side Access Services

FGB, FGC, FGD, 500, 800, 877, 888 and 900 Access services are provided by the Company via trunk side connections. Trunk side connections shall be established via orders for Entrance Facilities, Direct-Trunked Transport or Tandem-Switched Transport. 500 and 900 Access Service Trunks are provided only at Telephone Company designated switches capable of performing the customer identification function for 500 and 900 service. All 500 and 900 NXX code assignments and administration shall be in accordance with the North American Numbering Plan (NANP). 800/877/888 Access Service Trunks are offered only in conjunction with the 800/877/888 customer identification function as described in 6.2.5(A)(1) and in conjunction with 800/877/888 Data Base Query Service as described in 6.2.5(D). Customers may request 800, 877 or 888 access connections to suitably equipped end offices and access tandem offices. A list of those offices will be provided upon request. All 800/877/888 number assignments shall be administered by the Number Administration Service Center (NASC) through the Service Management System (SMS). When direct routing of 500, 800, 877, 888 or 900 Access Service traffic via 500, 800, 888 or 900 Access Service trunks is desired, or when the customer's 500, 800, 877, 888 or 900 Access Service traffic is combined in the same trunk group arrangement with the customer's FGC or FGD traffic, the customer must complete an Access Service Request as set forth in (1) or (2) following.

(1) Local Transport Entrance Facilities and Direct-Trunked Transport

ASRs for Entrance Facilities and Direct-Trunked Transport must specify the customer designated premises, type of service (e.g., Voice Grade, DS1 or DS3), the channel interface, and any options desired. In addition, ASRs for Direct-Trunked Transport must specify any Hubs involved and the end office, when direct routing to an end office is desired, or the access tandem if direct routing to an access tandem switch for purposes of obtaining Tandem-Switched Transport is desired.

ASRs for Direct-Trunked Transport must also specify the Feature Group or Serving Arrangement, number of trunks at the end office or tandem, major traffic types and directionality. Originating traffic may be categorized into Domestic, 500, 800/877/888, 900, operator and IDDD when the customer wishes to further segregate their originating traffic.

TARIFF BRANCH
RECEIVED
7/17/2006
PUBLIC SERVICE
COMMISSION
OF KENTUCKY

ISSUED: JULY 17, 2006
BY: Vice President
Lexington, Kentucky

EFFECTIVE: AUGUST 1, 2006

ACCESS SERVICE

5. Ordering Switching and Special Access Service (Cont'd)

5.1 Access Service Request Requirements (Cont'd)

5.1.2 Switched Access Ordering Requirements (Cont'd)

(A) Trunk Side Access Services (Cont'd)

(2) Tandem-Switched Transport

Customers may order FGB, FGC, FGD, 500, 800, 877, 888 and 900 Tandem-Switched Transport Services by specifying the number of trunks desired between their premises and the access tandem switch or BHMCs between the customer's premises and the end office and the Local Transport and Local Switching Options desired. When ordering by trunk quantities rather than BHMC quantities to an access tandem, the customer must also provide to the Company a Traffic Distribution Request specifying an estimate of the amount of traffic it will generate to and/or from each end office subtending the access tandem to assist the Company in its own efforts to project further facility requirements. The major traffic types and directionality must also be specified to enable efficient provisioning and billing functions.

TARIFF BRANCH
RECEIVED
7/17/2006
PUBLIC SERVICE
COMMISSION
OF KENTUCKY

ISSUED: JULY 17, 2006
BY: Vice President
Lexington, Kentucky

EFFECTIVE: AUGUST 1, 2006

ACCESS SERVICE

5. Ordering Switching and Special Access Service (Cont'd)

5.1 Access Service Request Requirements (Cont'd)

5.1.2 Switched Access Ordering Requirements (Cont'd)

(A) Trunk Side Access Services (Cont'd)

(2) Tandem-Switched Transport (Cont'd)

There are two major traffic types identified as Originating and Terminating traffic. Because some customers will wish to further segregate their originating traffic into separate trunk groups, originating traffic may be further categorized into Domestic, 500, 800, 877, 888, 900, Operator and IDDD.

When a customer orders FGB, FGC, FGD, 500, 800, 877, 888 or 900 Tandem-Switched Transport Service in trunks, the customer is responsible to assure that sufficient access facilities have been ordered to handle this traffic.

Customers may order FGB, FGC, FGD, 500, 800, 877, 888 and 900 Tandem Switched Transport by specifying the number of busy hour minutes of capacity (BHMC) from the customer's premises to the end office by Switched Access arrangement and by type of BHMC. This information is used to determine the number of transmission paths as set forth in 6.5.5 following. The customer then specified the Local Transport and Local Switching options desired, and for FGB the manner in which intrastate communications shall be completed.

The BHMC may be determined by the customer in the following manner. For each day (8 am to 11 pm, Monday through Friday, excluding national holidays), the customer shall determine the highest number of minutes of use for a single hour (e.g., 55 minutes in the 10-11 am hour). The customer shall, for the same hour period (i.e., busy hour) for each of twenty consecutive business days, pick the twenty consecutive business days in a calendar year which add up to the largest number of minutes of use. Both originating and terminating minutes shall be included. The customer shall then determine the average busy hour minutes of capacity (i.e., BHMC) by dividing the largest number of minutes of use figure for the same hour period for the consecutive twenty business day period by 20. This computation shall be performed for each end office the customer wishes to serve. These determinations thus establish the forecasted BHMC for each end office.

TARIFF BRANCH
RECEIVED
7/17/2006
PUBLIC SERVICE
COMMISSION
OF KENTUCKY

ISSUED: JULY 17, 2006
BY: Vice President
Lexington, Kentucky

EFFECTIVE: AUGUST 1, 2006

ACCESS SERVICE

5. Ordering Switching and Special Access Service (Cont'd)

5.1 Access Service Request Requirements (Cont'd)

5.1.2 Switched Access Ordering Requirements (Cont'd)

(A) Trunk Side Access Services (Cont'd)

(2) Tandem-Switched Transport (Cont'd)

BHMCs are differentiated by type and directionality of traffic carried over a Switched Access Service arrangement. Differentiation of traffic among BHMC types is necessary for the Company to properly design Switched Access Service to meet the traffic carrying capacity requirement of the customer. There are two major BHMC categories identified as Originating and Terminating. Because some customers will wish to further segregate their originating traffic into separate trunk groups, originating BHMCs are further categorized into Domestic, 500, 800, 877, 888, 900, Operator and IDDD.

(3) 900 NXX Code Activation/Deactivation

900 Access Service NXX Code Activation shall be ordered by the customer for an entire Company serving area, state within a serving area, or LATA associated with a Company serving area. The customer must specify in its Access Service Request, the 900 NXX codes to be activated or deactivated and the service area desired. The Company will activate or deactivate the requested NXX codes in all Company switches which perform the customer identification function for 900 Access Service within the service area ordered by the customer.

When a customer's 900 Access Service traffic originates from a Company end office which is not capable of performing the customer identification function the customer may be required, upon reasonable notice, to provide the Company an estimate of the amount of traffic it will generate from the end office to assist the Company in its own efforts to project future facility requirements.

For additions and/or deletions of 900 Access Service NXX(s) subsequent to the initial order for service, the customer shall place an Access Service Request for such additions and/or deletions at least 30 days prior to the effective date of the change in order to allow the Company sufficient time to implement the change. Calls originating in Company jurisdictions to NXXs which the customer has not ordered activated will be blocked in those end offices or access tandems which posses the technical capabilities to block such calls.

(4) (Reserved for Future Use)

(5) When ordering FGD Switched Access with 950-XXXX Access as described in 6.3.2(W), the customer shall provide an ASR specifying which 950-XXXX access code(s) are to be routed and the FGD Switched Access Service over which resulting originating 950-XXXX access code calls are to be routed.

TARIFF BRANCH
RECEIVED
7/17/2006
PUBLIC SERVICE
COMMISSION
OF KENTUCKY

ISSUED: JULY 17, 2006
BY: Vice President
Lexington, Kentucky

EFFECTIVE: AUGUST 1, 2006

ACCESS SERVICE

5. Ordering Switching and Special Access Service (Cont'd)

5.1 Access Service Request Requirements (Cont'd)

5.1.2 Switched Access Ordering Requirements (Cont'd)

(A) Trunk Side Access Services (Cont'd)

(6) Common Channel Signaling System 7 Services

When ordering SS7 Out of Band Signaling for FGD, 800, 877, 888 or 900 Access Service, the ASR must specify the existing CCS7 Access Service facilities or a related ASR for CCS7 Access Service as described in the GSTC Tariff FCC No. 1. The ASR must also include STP point codes, STP location identifier codes, FGD, 800, 877, 888 or 900 Access Service trunk circuit identification codes, and switched type. All traffic carried by that FGD, 800, 877, 888 or 900 Access Service will be equipped with Out of Band Signaling. The customer and the Telephone Company will work cooperatively to determine the number of CCS7 Access Service connections required to handle the customer's SS7 Out of Band Signaling traffic.

(7) 500 NXX Code Activation/Deactivation

500 Access Service NXX Code Activation shall be ordered by the customer for an entire Telephone Company serving area, state within a serving area, or LATA associated with a Telephone Company serving area. The customer must specify on its Access Service Request, the 500 NXX codes to be activated or deactivated and the service area desired. The Telephone Company will activate or deactivate the requested NXX codes in all Telephone Company switches which perform the customer identification function for 500 Access Service within the service area ordered by the customer.

When a customer's 500 Access Service traffic originates from a Telephone Company end office which is not capable of performing the customer identification function the customer may be required, upon reasonable notice, to provide the Telephone Company an estimate of the amount of traffic it will generate from the end office to assist the Telephone Company in its own efforts to project future facility requirements.

For additions and/or deletions of 500 Access Service NXX(s) subsequent to the initial order for service, the customer shall place an Access Service Request for such additions and/or deletions at least 30 days prior to the effective date of the change in order to allow the Telephone Company sufficient time to implement the change. Calls originating in Telephone Company jurisdictions to NXXs which the customer has not ordered activation will be blocked in those end offices or Telephone Company access tandems which possess the technical capabilities to block such calls.

(8) (Reserved for Future Use)

(9) When ordering FGD Switched Access with 950-XXXX Access as described in 6.3.2(AB), the customer shall provide an ASR specifying which 950-XXXX access code(s) are to be routed and the FGD Switched Access Service over which resulting originating 950-XXXX access code calls are to be routed.

TARIFF BRANCH
RECEIVED
7/17/2006
PUBLIC SERVICE
COMMISSION
OF KENTUCKY

ISSUED: JULY 17, 2006
BY: Vice President
Lexington, Kentucky

EFFECTIVE: AUGUST 1, 2006

ACCESS SERVICE

5. Ordering Switching and Special Access Service (Cont'd)

5.1 Access Service Request Requirements (Cont'd)

5.1.2 Switched Access Ordering Requirements (Cont'd)

(B) Line Side Access Services

FGA Access service is provided by the Telephone Company via line-side connections. All customers shall provide the ordering requirements as follows:

For FGA Switched Access Service, the customer shall specify the number of lines and the first point of switching (i.e., dial tone office), the type of Local Transport Entrance Facility and Direct-Trunked Transport, the Local Transport options and Local Switching options desired, and the manner in which interstate communications shall be completed. In addition, the customer shall also specify which lines are to be arranged in multiline hunt group arrangements and which lines are to be provided as single lines.

When FGA is ordered the customer shall specify whether or not the terminating traffic is to be restricted to the FGA Access Area (local exchange calling area) as set forth in 6.2.1(A)(7) following or allowed to extend beyond the FGA Access area but within the LATA. When FGA traffic is terminated beyond the Access Area but remains within the LATA, the rates for Switched Access as set forth in 6.5.8 following, will apply.

TARIFF BRANCH
RECEIVED
7/17/2006
PUBLIC SERVICE
COMMISSION
OF KENTUCKY

ISSUED: JULY 17, 2006
BY: Vice President
Lexington, Kentucky

EFFECTIVE: AUGUST 1, 2006

ACCESS SERVICE

5. Ordering Switching and Special Access Service (Cont'd)

5.1 Access Service Request Requirements (Cont'd)

5.1.3 Special Access Services

When placing an order for Special Access Services, the customer must provide the requirements as follows:

For all Special Access Services, the customer must specify the customer designated premises or Hubs involved, the type of service, (e.g., Voice Grade, High Capacity, etc.) the channel interface, technical specification package and options desired. For multipoint services, the channel interface at each premises may, at the request of the customer, be different but all such interfaces shall be compatible.

Where the Special Access Service is exempt from the Special Access Surcharge, the customer shall furnish with the Access Service Request the certification as set forth in 7.2.1(E) following. Exemption certifications may be provided in writing or by use of an Access Service Request.

5.1.4 Switched Access Interface

The Switched Access Interface optional features, as set forth in 6.3.2 following, is ordered by a customer in the provision of that customer's intrastate communications service (e.g., WATS, 800/877/888 or WATS-type services) to end users. Orders for the Switched Access Interface must specify the required information as set forth preceding for the appropriate Switched Access Service Feature Group and Voice Grade Special Access Service. The customer must also specify the Switched Access Interface optional features, if any, the directionality of the service to be provided (i.e., originating, terminating, or two-way) and the type of Supervisory Signaling.

If the wire center that serves the customer's end user premises is not a WATS Serving Office (WSO) the Telephone Company will configure the Special Access portion of the service to the nearest wire center where the necessary functions exist.

TARIFF BRANCH
RECEIVED
7/17/2006
PUBLIC SERVICE
COMMISSION
OF KENTUCKY

ISSUED: JULY 17, 2006
BY: Vice President
Lexington, Kentucky

EFFECTIVE: AUGUST 1, 2006

ACCESS SERVICE

5. Ordering Switching and Special Access Service (Cont'd)

5.1 Access Service Request Requirements (Cont'd)

5.1.5 Equal Access Conversions

When an office is scheduled to be converted to equal access, the IC must submit an Access Service Request for FGD service no later than 120 days prior to the end office equal access conversion date in order for the IC to participate in the presubscription process as described in 8.5 following.

Customers may request existing FGA or FGB services be converted to FGD upon the conversion of an office to equal access. Changes in Feature Group types are provided as set forth in 6.5.4(E) following.

(A) Feature Group D Facilities Shortages

In the event a shortage of FGD resources exists, the Telephone Company will make every reasonable effort to meet all Access Service Requests as of the equal access conversion date. In the event these efforts are unsuccessful, the Telephone Company will notify all ICs requesting FGD service that a shortage of facilities exist and allocation of available facilities among participating ICs is necessary.

The available resources are determined by the Telephone Company and represent the equipment and facility quantities necessary to provide FGD service, excluding intraLATA FGC and interLATA FGC terminating resources currently in service. If the interLATA FGC trunks are arranged to carry two-way traffic, one half will be considered available resources.

FGD resources are allocated to each IC based on the percent of end users that are presubscribed to that IC as counted 30 days prior to the conversion date. For example, if 10% of end users in an end office, or a group of end offices served by a common access tandem, scheduled to be converted to equal access are presubscribed to a particular IC, 10% of the total available FGD services will be allocated to that IC.

The quantity of resources in service for each IC as determined by the allocation process will be adjusted on the basis of actual usage and blocking measurements. Actual usage adjustments will be made 90 days after conversion to equal access. If necessary, this reallocation process will continue at three month intervals until all initial service requests have been met.

TARIFF BRANCH
RECEIVED
7/17/2006
PUBLIC SERVICE
COMMISSION
OF KENTUCKY

ISSUED: JULY 17, 2006
BY: Vice President
Lexington, Kentucky

EFFECTIVE: AUGUST 1, 2006

ACCESS SERVICE

5. Ordering Switching and Special Access Service (Cont'd)

5.1 Access Service Request Requirements (Cont'd)

5.1.6 Provision of Other Services

(A) Testing Service, Additional Labor, Restoration Priority and Special Facilities Routine shall be ordered with an Access Service Request or as set forth in (B) following. The rates and charges for these services, as set forth in other sections of this tariff, will apply in addition to the ordering charges set forth in this section and the rates and charges for the Access Service with which they are associated.

(B) Where possible, the Company will allow the services listed preceding to be subsequently added to an Access Service Request at any time, up to and including the service date for the Access Service. When added subsequently, charges for a design change as set forth in 5.3.1(C) following will apply when an engineering review is required.

(C) Additional Engineering is not an ordering option, but will be applied to an Access Service Request when the Company determines that Additional Engineering is necessary to accommodate a customer request. Additional Engineering conditions and charges are as set forth in 8.1 following and are in addition to the regulations, rates and charges specified in this section.

5.1.7 Access Order Service Date Intervals

Access Service is provided with Section Date Intervals. The Service Date Interval is that period of time which the Company requires to properly provision the service and begins when the customer submits a completed Access Service Request for service, as set forth in 5.1 preceding. The Company shall publish and make available to all customers, upon reasonable request, a schedule of Service Date Intervals applicable for Switched and Special Access Services. The schedule shall specify the services and the quantities of services that can be provided in the Service Data Intervals. Service Date Interval schedules are provided during regular business days at Company offices at which the customer places an order for Access Service.

TARIFF BRANCH
RECEIVED
7/17/2006
PUBLIC SERVICE
COMMISSION
OF KENTUCKY

ISSUED: JULY 17, 2006
BY: Vice President
Lexington, Kentucky

EFFECTIVE: AUGUST 1, 2006

ACCESS SERVICE

5. Ordering Switching and Special Access Service (Cont'd)

5.1 Access Service Request Requirements (Cont'd)

5.1.7 Access Order Service Data Intervals (Cont'd)

Access Services provided in a Service Data Interval will be installed during Company business days. If a customer requests that installation be done outside of scheduled work hours, and the Company agrees to this request, the customer will be subject to applicable Additional Labor Charges as set forth in 8.2. following.

5.1.8 Selection of Facilities For Access Order

When there are analog or digital high capacity facilities to a Hub on order or in service for the customer's use, the customer may request a specific channel or transmission path be used to provide the Switched or Special Access Service requested in an Access Service Request. The Company will make a reasonable effort to accommodate the customer request.

For all other Access Service Requests, the option to request a specific transmission path or channel is not provided except as provided for under Special Facilities Routing a set forth in 11. following.

5.1.9 Shared Use Facilities

Shared Use (i.e., Switched and Special Access Services provided over the same analog or digital high capacity facilities) is allowed. Shared use facilities to a Hub will be ordered and provided as either Switched or Special Access Service. While shared use is allowed, individual services utilizing these facilities must be ordered either as Switched Access Service or Special Access Service. When placing the order for the individual service(s), the customer must specify a channel assignment for each service ordered.

TARIFF BRANCH
RECEIVED
7/17/2006
PUBLIC SERVICE
COMMISSION
OF KENTUCKY

ISSUED: JULY 17, 2006
BY: Vice President
Lexington, Kentucky

EFFECTIVE: AUGUST 1, 2006

ACCESS SERVICE

5. Ordering Switching and Special Access Service (Cont'd)

5.2 Access Services Provided by More than One Company

The Telephone Company will provide Access Services under this tariff where more than one Telephone Company is involved in the provision of Access Service as set forth in (A), (B) or (C) following. The Single Company Billing arrangement as set forth in (A) following will be used for FGA switched access services except where interconnection arrangements between the telephone companies involved permit the use of the Multiple Company Billing arrangement as set forth in (B) following. The Telephone Company will notify the customer of the billing arrangement when the customer orders FGA service. The Multiple Company Billing arrangement, as set forth in (B) following, will be used for all FGB, FGC, FGD, 800/877/888 Access and 900 Access Services and Special Access Services.

(A) Single Company Billing

For FGA Switched Access Service the customer shall submit an ASR to the Telephone Company in whose territory the dial tone office is located. The Telephone Company receiving the order from the customer will arrange to provide the service and bill the customer as set forth in 2.4.7 (A) preceding.

For services ordered as set forth preceding, the customer shall provide a copy of the ASR containing all information as required in 5.1 preceding to any other Telephone Company involved in providing the service.

TARIFF BRANCH
RECEIVED
7/17/2006
PUBLIC SERVICE
COMMISSION
OF KENTUCKY

ISSUED: JULY 17, 2006
BY: Vice President
Lexington, Kentucky

EFFECTIVE: AUGUST 1, 2006

ACCESS SERVICE

5. Ordering Switching and Special Access Service (Cont'd)

5.2 Access Services Provided by More than One Company (Cont'd)

(B) Multiple Company Billing

Access services subject to Multiple Company Billing will be provided by the Telephone Companies involved in accordance with the Exchange Carrier Standards Association's Multiple Exchange Carrier Access Billing Guidelines (MECAB) and Multiple Exchange Carrier Ordering and Design Guidelines (MECOD).

For all Switched and Special Access Services, the customer shall submit an ASR to each Telephone Company involved in providing the service.

Each Telephone Company will provide the appropriate access service elements within its operating territory to a physical point of interconnection with the other involved Telephone Company(ies). The physical point of interconnection is the location where one Telephone Company's facilities connect with another Telephone Company's facilities.

Each Telephone Company that receives an order will bill the customer for the appropriate access service elements provided by each respective Telephone Company as set forth in 2.4.7 (B) preceding.

(C) EAS Arrangements

Where a customer utilizes FGA to originate and/or terminate calls within an Extended Area Service (EAS) calling area provided by more than one telephone company, as set forth in 2.4.7(C) preceding, the customer shall submit an ASR for FGA service in the manner set forth in (A) preceding. The customer shall also provide a copy of the ASR to any other Telephone Company involved in providing the service within the EAS calling area.

TARIFF BRANCH
RECEIVED
7/17/2006
PUBLIC SERVICE
COMMISSION
OF KENTUCKY

ISSUED: JULY 17, 2006
BY: Vice President
Lexington, Kentucky

EFFECTIVE: AUGUST 1, 2006

ACCESS SERVICE

5. Ordering Switching and Special Access Service (Cont'd)

5.3 Access Order Charges

5.3.1 Access Service Request Modifications

The customer may request a modification of its Access Service Request prior to the service date. The Company will make every effort to accommodate a requested modification when it is able to do so with the normal work force assigned to complete such an order within normal business hours. If the modification cannot be made with the normal work force during normal business hours, the Company will notify the customer. If the customer still desires the Access Service Request modification, the Company will schedule a new service date. All charges for Access Service Request modifications will apply on a per occurrence basis.

Any increase in the number of Special Access Service circuits or Switched Access Service Entrance Facility circuits, Direct-Trunked Transport circuits, lines, trunks or busy hour minutes of capacity will be treated as a new Access Service Request (for the increased amount only).

If order modifications are necessary to satisfy the transmission performance for a Special Access Service ordered by a customer, these changes will be made without order modification charges being incurred by the customer.

(A) Service Date Change Charge

Access Order service dates may be changed, but the new service date may not exceed the original service date by more than 30 calendar days. If the customer is unable to accept the service on the established service date an/or the customer requested service date is more than 30 calendar days after the original service date, the customer will have the option of (a) or (b) following:

(a) The original order will be cancelled by the Company, and reissued with appropriate cancellation charges applied, or

(b) the billing will commence for the services ordered on the original ASR.

If the Company determines it can accommodate the customer's request without delaying service dates for orders of other customers, a new service date may be established that is prior to the original standard or negotiated interval service date.

TARIFF BRANCH
RECEIVED
7/17/2006
PUBLIC SERVICE
COMMISSION
OF KENTUCKY

ISSUED: JULY 17, 2006
BY: Vice President
Lexington, Kentucky

EFFECTIVE: AUGUST 1, 2006

ACCESS SERVICE

5. Ordering Switching and Special Access Service (Cont'd)

5.3 Access Order Charges (Cont'd)

5.3.1 Access Service Request Modifications (Cont'd)

(A) Service Date Change Charge (Cont'd)

If the service date is changed to an earlier date, the customer will be notified by the Company that Expedited Order Charges as set forth in (D) following apply. Such charges will apply in addition to the Service Date Change Charge.

A Service Date Change Charge will apply, on a per order per occurrence basis, for each service date change after the plant test date on the ASR. The applicable charge is:

	USCO	CHARGE
Service Date Change Charge, per order	OMC	$26.21

(B) Design Change Charge

The customer may request a design change to the service ordered. A design change is any change to an Access Service Request which requires engineering review. An engineering review is a review by Company personnel, of service ordered and the requested changes to determine what changes in design, if any, are necessary to meet the changes requested by the customer. Design changes include such things as the addition or deletion of optional features or functions or a change in the signaling arrangements associated with Switched Access Entrance Facility interface groups. Design changes do not include a change of Switched Access Entrance Facility Type, end user premises, end office switch, Feature Group type or Special Access Service circuit type. Changes of this nature will require the issuance of a new order and the cancellation of the original order with appropriate cancellation charges applied.

The Company will review the requested change, notify the customer whether the change is a design change, if it can be accommodated and if a new service date is required. If the customer authorizes the Company to proceed with the design change, a Design Change Charge will apply. The Design Change Charge will apply on a per order per occurrence basis, for each order requiring a design change. The applicable charge is:

	USOC	Rate
Design Change Charge, per order	H28	$26.21

If a change of service date is required, the Service Date Change Charge as set forth in (A) preceding will also apply.

TARIFF BRANCH
RECEIVED
7/17/2006
PUBLIC SERVICE
COMMISSION
OF KENTUCKY

ISSUED: JULY 17, 2006
BY: Vice President
Lexington, Kentucky

EFFECTIVE: AUGUST 1, 2006

ACCESS SERVICE

5. Ordering Switching and Special Access Service (Cont'd)

5.3 Access Order Charges

5.3.1 Access Service Request Modifications

(D) Expedited Order Charge

(1) A customer may request an expedited service date. When this situation occurs, charges will be applicable as in Section 8.2. The Telephone Company will provide an estimate of the charges to the customer. The customer must accept the price estimate prior to the Telephone Company's performing the expedite. The actual charges billed to the customer will be no more than 10 percent over the estimate.

TARIFF BRANCH
RECEIVED
7/17/2006
PUBLIC SERVICE
COMMISSION
OF KENTUCKY

ISSUED: JULY 17, 2006
BY: Vice President
Lexington, Kentucky

EFFECTIVE: AUGUST 1, 2006

ACCESS SERVICE

5. Ordering Switching and Special Access Service (Cont'd)

5.3 Access Order Charges (Cont'd)

5.3.2 Cancellation of an Access Service Request

A customer may cancel an Access Service Request on any date after receipt of the Access Service Request by the Company and prior to the installation of service. The cancellation date is the date the Company receives written or verbal notice from the customer that the Access Service Request order is to be cancelled. The verbal notice must be followed by written confirmation within 10 days. If written confirmation of the cancellation is not received by the Company, the verbal notice will not be considered a valid cancellation notice. When a customer cancels an Access Service Request for the discontinuance of service, no charges apply for the cancellation.

Delay of Service Date by Customer

(A) If a customer or a customer's end user is unable to accept Access Service within 30 calendar days after the original service date, the customer has the choice of the following options:

- The Access Service Request shall be cancelled and charges set forth in (C) following will apply, or

- Billing for the service will commence.

In such instances, the cancellation date or the billing date, depending on which option is selected by the customer, shall be the 31st day beyond the original service date of the Access Service Request.

Delay of Service Date by Company

(B) If the Company misses a service date by more than 30 days due to circumstances over which it has direct control (excluding, e.g., Acts of God, governmental requirements, work stoppages and civil commotions), the customer may cancel the Access Service Request without incurring cancellation charges.

TARIFF BRANCH
RECEIVED
7/17/2006
PUBLIC SERVICE
COMMISSION
OF KENTUCKY

ISSUED: JULY 17, 2006
BY: Vice President
Lexington, Kentucky

EFFECTIVE: AUGUST 1, 2006

ACCESS SERVICE

5. Ordering Switching and Special Access Service (Cont'd)

5.3 Access Order Charges (Cont'd)

5.3.2 Cancellation of an Access Service Request (Cont'd)

(C) Cancellation Charge

When a customer cancels an Access Service Request prior to the service date, the Cancellation Charge specified in (1) or (2) following, shall apply.

(1) For Special Access, the Cancellation Charge is calculated, on a per order basis, by multiplying the total nonrecurring charge for the quantity ordered by the number of business days elapsed since the order date, and dividing that figure by the number of days in the service interval (i.e. the number of business days between the order date and the last day of the service date interval).

(2) For Switched Access, the Cancellation Charge is calculated, on a per order basis, by multiplying the total installation charge for the quantity ordered by the number of business days elapsed since the order date, and dividing that figure by the number of days in the service interval (i.e. the number of business days between the order date and the last day of the service date interval), and adding the Switched Access Ordering charge.

Partial Cancellation Charge

(D) Any decrease in the number of ordered Special Access Service circuits or Switched Access Service lines, trunks or busy hour minutes of capacity on a pending ASR will be treated as a partial cancellation. The charge will be determined by multiplying the total switched access installation or special access nonrecurring charge for the cancelled portion of the order by the number of business days elapsed since the order date and dividing that figure by the number of days in the service interval.

TARIFF BRANCH
RECEIVED
7/17/2006
PUBLIC SERVICE
COMMISSION
OF KENTUCKY

ISSUED: January 16, 2009
BY: Vice President
Lexington, Kentucky

EFFECTIVE: January 31, 2009

ACCESS SERVICE

5. Ordering Switching and Special Access Service (Cont'd)

5.3 Access Order Charges (Cont'd)

5.3.3 Minimum Period Charges

(A) When Access Service is disconnected prior to the expiration of the minimum period, charges are applicable for the balance of the minimum period. A disconnect constitutes facilities being returned to available inventory.

For purposes of applying minimum period charges, the disconnect date shall be two business days after the date the Company receives written notification from the customer or the date the customer requests service be disconnected, whichever is the later date.

The Minimum Period Charge for monthly billed services will be determined as follows:

(B) (D)
|
(D)

For Special Access Service and Switched Access Entrance Facility and Direct-Trunked Transport services, the charge for a month or fraction thereof is the applicable monthly rates for the services as set forth in 7.2.3 and 6.6 following.

The Minimum Period Charge for part-time Television and Program Audio Service is the applicable daily rate for the service as set forth in 7.2.3 following.

PUBLIC SERVICE COMMISSION
OF KENTUCKY
EFFECTIVE
1/31/2009
PURSUANT TO 807 KAR 5:011
SECTION 9 (1)
By _____
Executive Director

ISSUED: JULY 17, 2006
BY: Vice President
Lexington, Kentucky

EFFECTIVE: AUGUST 1, 2006

ACCESS SERVICE

6. Switched Access Service

6.1 General

Switched Access Service, which is available to customers for their use in furnishing their service to end users, provides a two-point electrical communications path between a customer's premises and end user's premises. It provides for the use of common terminating, switching and trunking facilities, dedicated trunking facilities, and common subscriber plant of the Telephone Company. Switched Access Service provides for the ability to originate calls from an end user's premises to a customer's premises, and to terminate calls from a customer's premises to an end user's premises in the Access Area where it is provided. Specific descriptions of each Switched Access Service are provided in Section 6.2 following.

The Company, to the extent that such services are or can be made available with reasonable effort, and after provision has been made for the Telephone Company's telephone exchange services, will provide to the customer upon reasonable notice service offered in this section of this tariff at rates and charges specified therein.

6.1.1 Service Arrangements

Switched Access is provided in conjunction with either of two types of access services, bundled Feature Groups or unbundled Lineside described in 6.2.5, 6.2.6, and 6.2.7, are provided in two basic categories differentiated by their technical characteristics and how they connect, line side or trunk side connection, to the Telephone Company's first point of switching. Feature Group A (FGA) is defined as line side connections to the Telephone Company's network. Feature Group B (FGB), Feature Group C (FGC), and Feature Group D (FGD), are defined as trunk side connections to the Telephone Company's network. The use of a line side or trunk side switched access connection is dependent upon the switched access arrangement ordered by the customer.

Feature Groups are arranged for either originating, terminating or two-way calling, based on the customer end office switching capacity ordered, while originating 500 Access Service, 800 Access Service and 900 Access Service is arranged for originating calling only. originating calling permits the delivery of calls from Telephone Exchange Service locations to the customer's premises. Terminating calling permits the delivery of calls from the customer's premises to Telephone Exchange Service locations. Two-way calling permits the delivery of calls in both directions, but not simultaneously.

Switched Access will be provided as both Feature Groups to Telephone Company end offices either directly routed or routed via an access tandem, except as set forth following:

- Feature Group trunk side equivalents (FGB, FGC, and FGD) may not be provided for the same Carrier Identification Code (CIC) and/or Billing Account Number (BAN) at Telephone Company end offices which subtend the same tandem. When a Telephone Company end office subtends multiple tandems, Feature Group trunk side equivalents may not be provided for the same CIC and/or BAN at any Telephone Company end office which subtends either tandem.
- Feature Group line side equivalents (FGA) may not be mixed in the same multiline hunt group.

TARIFF BRANCH
RECEIVED
7/17/2006
PUBLIC SERVICE
COMMISSION
OF KENTUCKY

ISSUED: JULY 17, 2006
BY: Vice President
Lexington, Kentucky

EFFECTIVE: AUGUST 1, 2006

ACCESS SERVICE

6. Switched Access Service (Cont'd)

6.1 General (Cont'd)

6.1.1 Service Arrangements (Cont'd)

Switched Access ordering regulations are detailed in Section 5.1.

Switched access feature groups may be provided in conjunction with voice grade Special Access services in order to complete communications to and from the customer's location. A complete description of the Switched Access Interface is set forth in Section 6.3.2(S).

6.1.2 Technical Specifications

There are three specific transmission specifications (i.e., Types A, B and C) that have been identified for the provision of Switched Access Arrangements. The specifications provided are dependent on the Interface Group associated with the Local Transport Entrance Facility and the routing of the service, i.e., whether the service is routed directly to the end office or via an access tandem. The parameters for the transmission specifications and descriptions of the Interface Groups are set forth in Section 9.

6.1.3 Optional Features

There are various nonchargeable optional features available with the Switched Access Feature Group Arrangements. These additional optional features are provided as Local Transport, Common Switching or Transport Termination options. Nonchargeable optional features are identified in Sections 6.2.1, 6.2.2, 6.2.3, 6.2.4, 6.2.10, 6.2.11 and 6.2.13.

TARIFF BRANCH
RECEIVED
7/17/2006
PUBLIC SERVICE
COMMISSION
OF KENTUCKY

ISSUED: JULY 17, 2006
BY: Vice President
Lexington, Kentucky

EFFECTIVE: AUGUST 1, 2006

ACCESS SERVICE

6. Switched Access Service (Cont'd)

6.2 Switched Access Service Arrangements

Following are detailed descriptions of each of the available Feature Groups, 500 Access Service, 800/877/888 Access Service and 900 Access Service. Each is described in terms of its specific physical characteristics and calling patterns, the transmission specifications with which it is provided, and the optional features available for use.

Optional features are described in 6.3 following. Additional regulations pertaining to the provision of these arrangements are set forth in 6.4 following.

TARIFF BRANCH
RECEIVED
7/17/2006
PUBLIC SERVICE
COMMISSION
OF KENTUCKY

ISSUED: JULY 17, 2006
BY: Vice President
Lexington, Kentucky

EFFECTIVE: AUGUST 1, 2006

ACCESS SERVICE

6. Switched Access Service (Cont'd)

6.2 Switched Access Service Arrangements (Cont'd)

6.2.1 Feature Group A (FGA)

(A) Description

(1) FGA is provided via a line side connection at Company electronic and electromechanical end office switches with an associated seven digit telephone number for the customer's use in originating communications to or terminating communications from an Interexchange Carrier's Intrastate Service or a customer provided intrastate communications capability. At the option of the customer, FGA is provided on a single or multiple line group basis and is arranged for originating calling only, terminating calling only, or two-way calling.

(2) FGA provides a line side termination at the first point of switching. The line side termination will be provided with either ground start supervisory signaling or loop start supervisory signaling. The type of signaling is at the option of the customer.

(3) The Company shall select the first point of switching, within the selected FGA Access Area, at which the line side connection is to be provided unless the customer requests a different first point of switching and Company facilities and measurement capabilities, where necessary, are available to accommodate such a request.

(4) A seven digit local telephone number assigned by the Company is provided for access to FGA switching in the originating direction. The seven digit local telephone number will be associated with the selected end office switch and is of the form NXX-XXXX.

TARIFF BRANCH
RECEIVED
7/17/2006
PUBLIC SERVICE
COMMISSION
OF KENTUCKY

ISSUED: JULY 17, 2006
BY: Vice President
Lexington, Kentucky

EFFECTIVE: AUGUST 1, 2006

ACCESS SERVICE

6. Switched Access Service (Cont'd)

6.2 Switched Access Service Arrangements (Cont'd)

6.2.1 Feature Group A (FGA) (Cont'd)

(A) Description (Cont'd)

(4) (Cont'd)

If the customer requests a specific seven digit telephone number that is not currently assigned, and the Company can, with reasonable effort, comply with that request, the requested number will be assigned to the customer.

(5) FGA switching, when used in the terminating direction, is arranged with dial tone start-dial signaling. When used in the terminating direction FGA switching may, at the option of the customer, be arranged for dial pulse or dual tone multifrequency address signaling, subject to availability of equipment at the first point of switching. When FGA switching is provided in a hunt group or uniform call distribution arrangement, all FGA switching will be arranged for the same type of address signaling.

(6) No address signaling is provided by the Company when FGA Switching is used in the originating direction. Address signaling in such cases, if required by the customer, must be provided by the customer's end user using inband tone signaling techniques. Such inband tone address signals will not be regenerated by the Company and will be subject to the ordinary transmission capabilities of the local Transport provided.

(7) FGA Switching, when used in the terminating direction, may be used to access the Company specified set of valid NXXs within the FGA Access Area.

For FGA, the Access Area is defined as the local exchange calling area of the end office switch from which the FGA service is provided as set forth in the Company's local or general exchange service tariff.

At the customer's option, Access is also provided for terminating FGA calls, established on a 1+ basis, to NXXs outside the FGA Access Area but remaining within the LATA. Switched Access Service rate elements will apply to such traffic as set forth in 6.5.9 following.

TARIFF BRANCH
RECEIVED
7/17/2006
PUBLIC SERVICE
COMMISSION
OF KENTUCKY

ISSUED: JULY 17, 2006
BY: Vice President
Lexington, Kentucky

EFFECTIVE: AUGUST 1, 2006

ACCESS SERVICE

6. Switched Access Service (Cont'd)

6.2 Switched Access Service Arrangements (Cont'd)

6.2.1 Feature Group A (FGA) (Cont'd)

(A) Description (Cont'd)

(7) (Cont'd)

Terminating access is also provided to local operator service (0- and 0+), Directory Assistance (411 where available and 555-1212) emergency reporting service (911 where available), exchange telephone repair (611 where available), time or weather announcement services of the Company, community information services of an information service provider, and other customers' services (by dialing the appropriate digits).

Charges for FGA terminating calls requiring operator assistance or calls to 611 or 911 will only apply where sufficient call details are available. Additional non-access charges will also be billed on a separate account for (1) an operator surcharge, as set forth in the local exchange tariffs, for local operator assistance (0- and 0+) calls, (2) calls to certain community information services, for which rates are applicable under Company exchange service tariffs, e.g., 976 (DIAL-IT) Network Services, and(3) calls from a FGA line to another customer's service in accordance with that customer's applicable service rates when the Company performs the billing function for that customer.

For calls to Directory Assistance additional non-access charges may also be billed at the applicable rates under the Company local exchange tariffs.

(8) Feature Group A Switched Access Service is available with additional termination (i.e. extensions) of the service at different building(s) in the same or different local calling area. Application of rates for Feature Group A extension service is found in 6.5.8 following.

(9) When a FGA switching arrangement for an individual customer (a single line or entire hunt group) is discontinued at an end office, an intercept announcement is provided. This arrangement provides, for a limited period of time, an announcement that the service associated with the number dialed has been disconnected.

TARIFF BRANCH
RECEIVED
7/17/2006
PUBLIC SERVICE
COMMISSION
OF KENTUCKY

ISSUED: JULY 17, 2006
BY: Vice President
Lexington, Kentucky

EFFECTIVE: AUGUST 1, 2006

ACCESS SERVICE

6. Switched Access Service (Cont'd)

6.2 Switched Access Service Arrangements (Cont'd)

6.2.1 Feature Group A (FGA) (Cont'd)

(A) Description (Cont'd)

(10) Message Unit Credit

Calls from end users to the seven digit local telephone numbers associated with Feature Group A Switched Access Service are subject to Company local and/or general exchange service tariff charges (including message unit and toll charges as applicable). The monthly bills rendered to customers for their Feature Group A Switched Access Service will include a credit to reflect any message unit charges billed to their end users under the Company's local and/or general exchange service tariffs. The credit will apply for recorded originating usage or for assumed originating usage, as appropriate for the FGA service provided. When the credit is applied on assumed usage, such credit will not exceed the assumed levels of usage set forth in 6.6 following. No credit will apply for any terminating FGA access minutes. The message unit credit for originating access minutes will be based on the generally applicable message unit charges of the Company. All applicable message unit credits will be developed on an exchange specific basis only.

TARIFF BRANCH
RECEIVED
7/17/2006
PUBLIC SERVICE
COMMISSION
OF KENTUCKY

ISSUED: JULY 17, 2006
BY: Vice President
Lexington, Kentucky

EFFECTIVE: AUGUST 1, 2006

ACCESS SERVICE

6. Switched Access Service (Cont'd)

6.2 Switched Access Service Arrangements (Cont'd)

6.2.1 Feature Group A (FGA) (Cont'd)

(B) Optional Features

(1) Common Switching Optional Features

(a) Hunt Group Arrangement
(b) Uniform Call Distribution Arrangement
(c) Nonhunting Number for Use with Hunt Group Arrangement or Uniform Call Distribution Arrangement
(d) Call Denial
(e) Service Code Denial
(f) Combined Access Service Arrangement

(2) Transport Termination Optional Features

(a) Two-way operation with dial pulse address signaling and loop start supervisory signaling
(b) Two-way operation with dial pulse address signaling and ground start supervisory signaling
(c) Two-way operation with dual tone multifrequency address signaling and loop start supervisory signaling
(d) Two-way operation with dual tone multifrequency address signaling and ground start supervisory signaling
(e) Terminating operation with dial pulse address signaling and loop start supervisory signaling
(f) Terminating operation with dial pulse address signaling and ground start supervisory signaling
(g) Terminating operation with dual tone multifrequency address signaling and loop start supervisory signaling
(h) Terminating operation with dual tone multifrequency address signaling and ground start supervisory signaling
(i) Originating operation with loop start supervisory signaling
(j) Originating operation with ground start supervisory signaling.

TARIFF BRANCH
RECEIVED
7/17/2006
PUBLIC SERVICE
COMMISSION
OF KENTUCKY

ISSUED: JULY 17, 2006
BY: Vice President
Lexington, Kentucky

EFFECTIVE: AUGUST 1, 2006

ACCESS SERVICE

6. Switched Access Service (Cont'd)

6.2 Switched Access Service Arrangements (Cont'd)

6.2.1 Feature Group A (FGA) (Cont'd)

(B) Optional Features (Cont'd)

(3) Local Transport Optional Features

(a) Supervisory Signaling
(b) Customer Specified Entry Switch Receive Level

(4) Local Feature

Certain other features which may be available in connection with Feature Group A are provided under the Company's local and/or general exchange service tariffs.

These are:
(a) Speed Calling
(b) Remote Call Forwarding
(c) Bill Number Screening
(d) IntraLATA extensions

(C) Transmission Specifications

FGA is provided with either Type B or Type C Transmission Specifications. The specifications for the associated parameters are guaranteed to the first point of switching. Type C Transmission Specifications are provided with Interface Group 1 and Type B is provided with Interface Groups 2 through 10. Type DB Data Transmission Parameters are provided with FGA to the first point of switching. FGA Interface Groups and Codes are described further in 9 following. FGA Transmission specifications are described further in 9 following.

TARIFF BRANCH
RECEIVED
7/17/2006
PUBLIC SERVICE
COMMISSION
OF KENTUCKY

ISSUED: JULY 17, 2006
BY: Vice President
Lexington, Kentucky

EFFECTIVE: AUGUST 1, 2006

ACCESS SERVICE

6. Switched Access Service (Cont'd)

6.2 Switched Access Service Arrangements (Cont'd)

6.2.2 Feature Group B (FGB)

(A) Description

(1) FGB provides trunk side access to Company end office switches with an associated uniform access code for the customer's use in originating communications to and terminating communications from an Interexchange Carrier's Intrastate Service or a customer-provided intrastate communications capability. FGB is provided by the Company directly to appropriately equipped Company electronic end offices or via Company designated electronic access tandem switches, which provides access to Company electronic and electromechanical end offices within that Access Tandem Network.

(2) FGB is provided as trunk side switching through the use of end office or access tandem switch trunk equipment. The switch trunk equipment is provided with wink start-pulsing signals and answer and disconnect supervisory signaling.

(3) FGB switching is provided with multifrequency address signaling in both the originating and terminating directions. Except for FGB switching provided with automatic number identification (ANI) or rotary dial station signaling arrangements as set forth in 6.3 following, any other address signaling in the originating direction, if required by the customer, must be provided by the customer's end user using inband tone signaling techniques. Such inband tone address signals will not be regenerated by the Company and will be subject to the ordinary transmission capabilities of the Local Transport provided.

The access code for FGB switching is a uniform access code in the form of 950-XXXX or 1+950-XXXX for carriers. One uniform access code will be assigned to the customer for the customer's domestic communications and another will be assigned to the customer for its international communications, if required. These uniform access codes will be the assigned access numbers of all FGB switched access service provided to the customer by the Company.

TARIFF BRANCH
RECEIVED
7/17/2006
PUBLIC SERVICE
COMMISSION
OF KENTUCKY

ISSUED: JULY 17, 2006
BY: Vice President
Lexington, Kentucky

EFFECTIVE: AUGUST 1, 2006

ACCESS SERVICE

6. Switched Access Service (Cont'd)

6.2 Switched Access Service Arrangements (Cont'd)

6.2.2 Feature Group B (FGB) (Cont'd)

(A) Description (Cont'd)

(5) FGB switching, when used in the terminating direction, may be used to access valid NXXs in the FGB Access Area. When directly routed to an end office, the Access Area for FGB includes only those valid NXX codes served by that end office. When routed through an access tandem the Access Area for FGB service includes only those valid NXX codes served by end offices subtending that access tandem.

Access is also available to time or weather announcement services of the Company, community information services of an information service provider and other customers' services (by dialing the appropriate digits).

The customer will also be billed additional non-access charges for calls to certain community information services for which rates are applicable under Company exchange service tariffs, e.g., 976 (DIAL-IT) Network Service. Additionally, non-access charges will also be billed for calls from a FGB trunk to another customer's service in accordance with that customer's applicable service rates when the Company performs the billing function for that customer.

Calls in the terminating direction will not be completed to 950-XXXX access codes, local operator assistance (0+), Directory Assistance (411 and 555-1212), service codes 611 and 911 or 101XXXX access code. FGB may not be switched, in the terminating direction, to Switched Access Service Feature Groups B, C and D.

TARIFF BRANCH
RECEIVED
7/17/2006
PUBLIC SERVICE
COMMISSION
OF KENTUCKY

ISSUED: JULY 17, 2006
BY: Vice President
Lexington, Kentucky

EFFECTIVE: AUGUST 1, 2006

ACCESS SERVICE

6. Switched Access Service (Cont'd)

6.2 Switched Access Service Arrangements (Cont'd)

6.2.2 Feature Group B (FGB) (Cont'd)

(A) Description (Cont'd)

(6) The Company will establish a trunk group or groups for the customer at end office switches or access tandem switches where FGB switching is provided. When required by technical limitations, a separate trunk group will be established for each type of FGB switching arrangement provided. Different types of FGB or other switching arrangements may be combined in a single trunk group at the option of the Company.

(7) When all FGB switching arrangements are discontinued at end office and/or in a Access Area, an intercept announcement is provided. This arrangement provides, for a limited period of time, an announcement that the service associated with the number dialed has been disconnected.

TARIFF BRANCH
RECEIVED
7/17/2006
PUBLIC SERVICE
COMMISSION
OF KENTUCKY

ISSUED: JULY 17, 2006
BY: Vice President
Lexington, Kentucky

EFFECTIVE: AUGUST 1, 2006

ACCESS SERVICE

6. Switched Access Service (Cont'd)

6.2 Switched Access Service Arrangements (Cont'd)

6.2.2 Feature Group B (FGB) (Cont'd)

(B) Optional Features

(1) Common Switching Optional Features

(a) Automatic Number Identification (ANI)
(b) Up to Seven Digit Outpulsing of Access Digits to Customer
(c) Combined Access Service Arrangement

(2) Transport Termination Optional Features

(a) Rotary Dial Station Signaling

(3) Local Transport Optional Features

(a) Customer Specification of Local Transport Termination
(b) Supervisory Signaling
(c) Customer Specified Entry Switch Receive Level

(4) Local Features

Another feature, Bill Number Screening, which may be available in connection with FGB, is provided under the Company's local and/or general exchange service tariffs.

(C) Transmission Specifications

FGB is provided with either Type B or Type C Transmission Specifications. The specifications for the associated parameters are guaranteed to the end office when routed directly or to the first point of switching when routed via an access tandem. Type C Transmission Specifications are provided with Interface Group 1 and Type B is provided with Interface Groups 2 through 10. Type DB Data Transmission Parameters are provided with FGB to the first point of switching.

TARIFF BRANCH
RECEIVED
7/17/2006
PUBLIC SERVICE
COMMISSION
OF KENTUCKY

ISSUED: JULY 17, 2006
BY: Vice President
Lexington, Kentucky

EFFECTIVE: AUGUST 1, 2006

ACCESS SERVICE

6. Switched Access Service (Cont'd)

6.2 Switched Access Service Arrangements (Cont'd)

6.2.3 Feature Group C (FGC)

(A) Description

(1) FGC, available to AT&T only, is provided at all Company end office switches on a direct trunk basis or via Company designated access tandem switches for AT&T's use in originating and terminating communications. FGC switching is provided to AT&T at an end office switch unless Feature Group D end office switching is provided in the same office. When FGD switching is available, FGC switching will not be provided.

(2) FGC is provided as trunk side switching through the use of end office or access tandem switch trunk equipment. The switch trunk equipment is provided with answer and disconnect supervisory signaling. Wink start start-pulsing signals are provided in all offices where available. In those offices where wink start start-pulsing signals are not available, delay dial start-pulsing signals will be provided, unless immediate dial pulse signaling is provided, in which case no start-pulsing signals are provided.

(3) FGC is provided with multifrequency address signaling except in certain electromechanical end office switches where multifrequency signaling is not available. In such switches, the address signaling will be dial pulse, revertive pulse, immediate dial pulse or panel call indicator signaling, whichever is available. Up to 12 digits of the called party number dialed by the customer's end user using dual tone multifrequency or dial pulse address signals will be provided by Company equipment to the customer's premises where the Switched Access Service terminates. Such called party number signals will be subject to the ordinary transmission capabilities of the Local Transport provided.

TARIFF BRANCH
RECEIVED
7/17/2006
PUBLIC SERVICE
COMMISSION
OF KENTUCKY

ISSUED: JULY 17, 2006
BY: Vice President
Lexington, Kentucky

EFFECTIVE: AUGUST 1, 2006

ACCESS SERVICE

6. Switched Access Service (Cont'd)

6.2 Switched Access Service Arrangements (Cont'd)

6.2.3 Feature Group C (FGC) (Cont'd)

(A) Description(Cont'd)

(4) No access code is required for FGC switching. The telephone number dialed by the customer's end user shall be a seven or ten digit number for calls in the North American Number Plan (NANP). For international calls outside the NANP, a seven to twelve digit number may be dialed. The form of the numbers dialed by the customer's end user is NXX-XXXX, 0 or 1+ NXX-XXXX, NPA + NXX-XXXX, 0 pr 1 + NPA + NXX-XXXX, and, when the end office is equipped for International Direct Distance Dialing (IDDD), 01 + CC + NN or 011 + CC + NN.

(5) FGC switching, when used in the terminating direction, may be used to access valid NXXs in the FGC Access Area. When directly routed to an end office the FGC Access Area includes only those valid NXX codes served by that office. When routed through an access tandem, the FGC Access Area includes only those valid NXX codes served by offices subtending that access tandem.

Access is also available to time or weather announcement services of the Company, community information services of an information provider, and other customers' services (by dialing the appropriate codes) when the services can be reached using valid NXX codes.

Where measurement capabilities exist, the customer will also be billed additional non-access charges for calls to certain community information services, for which rates are applicable under Company exchange service tariffs, e.g., 976 (DIAL-IT) Network Services. Additionally, non-access charges will also be billed for calls from a FGC trunk to another customers' service in accordance with that customer's applicable service rates when the Company performs the billing function for that customer. Calls in the terminating direction will not be completed to 950-XXXX or 1+950-XXXX access codes, local operator assistance (0- and 0+), Directory Assistance service codes 611 and 911 or 101XXXX access code. FGC may not be switched, in the terminating direction, to Switched Access Service Feature Groups B, C or D.

(6) The Company will establish a trunk group or groups for the customer at end office switches or access tandem switches where FGC switching is provided. When required by technical limitations, a separate trunk group will be established for each type of FGC switching arrangement provided. Different types of FGC or other switching arrangements may be combined in a single trunk group at the option of the Company.

TARIFF BRANCH
RECEIVED
7/17/2006
PUBLIC SERVICE
COMMISSION
OF KENTUCKY

ISSUED: JULY 17, 2006
BY: Vice President
Lexington, Kentucky

EFFECTIVE: AUGUST 1, 2006

ACCESS SERVICE

6. Switched Access Service (Cont'd)

6.2 Switched Access Service Arrangements (Cont'd)

6.2.3 Feature Group C (FGC) (Cont'd)

(B) Optional Features

(1) Common Switching Optional Features

(a) Automatic Number Identification (ANI)
(b) Service Class Routing
(c) Dial Pulse Address Signaling
(d) Revertive Pulse Address Signaling
(e) Delay Dial Start-Pulsing Signaling
(f) Immediate Dial Pulse Address Signaling
(g) Panel Call Indicator Address Signaling
(h) Alternate Traffic Routing
(i) Trunk Access Limitation
(j) Combined Access Service Arrangement

(2) Transport Termination Optional Features

Operator Trunks - i.e., Coin, Non-Coin and Combined Coin and Non-Coin. (Non-Coin Trunks are provided at Company electronic and electromechanical end offices. Coin and Combined Coin and Non-Coin are provided only at Company electronic end offices and other Company end offices where equipment is available.

(3) Local Transport Optional Features

Supervisory Signaling (as set forth in 6.3.1(A) following)

(C) Transmission Specifications

FGC is provided with either Type B or Type C Transmission Specifications as follows:

- When routed directly to the end office either Type B or Type C is provided.
- When routed to an access tandem only Type B is provided.
- Type B or Type C is provided on the transmission path from the access tandem to the end office.

TARIFF BRANCH
RECEIVED
7/17/2006
PUBLIC SERVICE
COMMISSION
OF KENTUCKY

ISSUED: JULY 17, 2006
BY: Vice President
Lexington, Kentucky

EFFECTIVE: AUGUST 1, 2006

ACCESS SERVICE

6. Switched Access Service (Cont'd)

6.2 Switched Access Service Arrangements (Cont'd)

6.2.3 Feature Group C (FGC) (Cont'd)

(C) Transmission Specifications (Cont'd)

Type C Transmission Specifications are provided with Interface Group 1 when routed directly to an end office. Type B is provided with Interface Groups 2 through 10 whether routed directly to an end office or to an access tandem.

Type DB Data Transmission Parameters are provided with FGC for the transmission path between the customer's premises and the end office when directly routed to the end office, and Type DB Data Transmission Parameters are provided for the transmission path between the customer's premises and the access tandem and between the access tandem and the end office when routed via an access tandem.

TARIFF BRANCH
RECEIVED
7/17/2006
PUBLIC SERVICE
COMMISSION
OF KENTUCKY

ISSUED: JULY 17, 2006
BY: Vice President
Lexington, Kentucky

EFFECTIVE: AUGUST 1, 2006

ACCESS SERVICE

6. Switched Access Service (Cont'd)

6.2 Switched Access Service Arrangements (Cont'd)

6.2.4 Feature Group D (FGD)

(A) Description

(1) FGD is provided at Company designated end office switches whether routed directly or via Company designated access tandem switches. The Company will designate the First Point(s) of Switching for FGD service where the Company elects to aggregate traffic at a central location. Those companies providing FGD in a centralized equal access tandem arrangement are listed in 15.2, following.

(2) FGD is provided as trunk side switching through the use of end office or access tandem switch trunk equipment. The switch trunk equipment is provided with wink start start-pulsing signals and answer and disconnect supervisory signaling except for FGD provided with SS7 Out of Band Signaling.

(3) FGD switching is provided with multifrequency address signaling or SS7 Out of Band Signaling. FGD with SS7 Out of Band Signaling is provided at suitably equipped Telephone Company end office or access tandem switches. Up to 12 digits of the called party number dialed by the customer's end user using dual tone multifrequency or dial pulse address signals will be provided by Company equipment to the customer's premises where the Switched Access Service terminates. Such address signals will be subject to the ordinary transmission capabilities of the Local Transport provided.

(4) FGD switching, when used in the terminating direction, may be used to access valid NXXs in the FGD Access Area. When directly routed to an end office the FGD Access Area includes only those valid NXX codes served by that office. When routed through an access tandem the FGD Access Area includes only those valid NXX codes served by equal access end offices in the access tandem network.

Access is also available to time or weather announcement services of the Company, community information service of an information service provider, and other customers' services (by dialing the appropriate codes) when such services can be reached using valid NXX codes.

TARIFF BRANCH
RECEIVED
7/17/2006
PUBLIC SERVICE
COMMISSION
OF KENTUCKY

ISSUED: JULY 17, 2006
BY: Vice President
Lexington, Kentucky

EFFECTIVE: AUGUST 1, 2006

ACCESS SERVICE

6. Switched Access Service (Cont'd)

6.2 Switched Access Service Arrangements (Cont'd)

6.2.4 Feature Group D (FGD) (Cont'd)

(A) Description (Cont'd)

(5) The Company will establish a trunk group or groups for the customer at the First Point(s) of Switching where FGD switching is provided. When required by technical limitations, a separate trunk group will be established for each type of FGD switching arrangement provided. Different types of FGD or other switching arrangements may be combined in a single trunk group at the option of the Company.

(6) No access code is required for calls to a customer over FGD Switched Access Service if the end user's telephone exchange service is arranged for presubscription to that customer, as set forth in 8.5 following. Where no access code is required, the number dialed by the customer's end user shall be a seven or ten digit number for calls in the North American Number Plan (NANP). For international calls outside the NANP, a seven to twelve digit number may be dialed. The form of the number dialed by the customer's end user is NXX-XXXX, 0 or 1 + NXX-XXXX, NPA + NXX-XXXX, 0 or 1 + NPA + NXX-XXXX, and, when the end office is equipped for International Direct Distance Dialing (IDDD), 01 + CC + NN or 011 + CC + NN.

The access code for FGD switching is a uniform access code of the form 101XXXX. Technical limitations in certain end offices subtending a centralized equal access tandem will preclude the availability of a 101XXXX access code. These offices are identified in the National Exchange Carrier Association Tariff F.C.C. No. 4. A single access code will be the assigned number of all FGD access provided to the customer by the Company.

When the 101XXXX access code is used, FGD switching also provides for dialing the digit 0 for access to the customer's operator, 911 for access to the Company's emergency reporting service, or the end-of-dialing digit for cut-through access to the customer's premises.

TARIFF BRANCH
RECEIVED
7/17/2006
PUBLIC SERVICE
COMMISSION
OF KENTUCKY

ISSUED: JULY 17, 2006
BY: Vice President
Lexington, Kentucky

EFFECTIVE: AUGUST 1, 2006

ACCESS SERVICE

6. Switched Access Service (Cont'd)

6.2 Switched Access Service Arrangements (Cont'd)

6.2.4 Feature Group D (FGD) (Cont'd)

(B) Optional Features

(1) Common Switching Optional Features

(a) Automatic Number Identification (ANI)
(b) Service Class Routing
(c) Alternate Traffic Routing
(d) Call Gapping Arrangement
(e) Trunk Access Limitation
(f) International Carrier Option
(g) Non-Overlap Outpulsing
(h) Cut-Through
(i) Combined Access Service Arrangement
(j) SS7 Out of Band Signaling
(k) Switched Data Service
(l) FGD with 950 Access

(2) Transport Termination Optional Features

(a) Operator Trunk, Full Feature Arrangement

(3) Local Transport Optional Features

(a) Supervisory Signaling (as set forth in 6.3.1(A) following)

(C) Transmission Specifications

FGD is provided with either Type A, Type B or Type C Transmission Specifications as follows:

- When routed directly to the end office either Type B or C is provided.
- When routed to a Telephone Company access tandem only Type A is provided.
- Type A is provided on the transmission path from the Telephone Company access tandem to the end office.

Type C Transmission specification are provided with Interface Group 1. Type A and Type B Transmission Specifications are provided with Interface Groups 2 through 10.

Type DA Data Transmission Parameters are provided for the transmission path between the customer's premises and the access tandem and between the access tandem and the end office. Type DB Data Transmission Parameters are provided with FGD for the transmission path between the customer's premises and the end office when directly routed to the end office.

TARIFF BRANCH
RECEIVED
7/17/2006
PUBLIC SERVICE
COMMISSION
OF KENTUCKY

ISSUED: JULY 17, 2006
BY: Vice President
Lexington, Kentucky

EFFECTIVE: AUGUST 1, 2006

ACCESS SERVICE

6. Switched Access Service (Cont'd)

6.2 Switched Access Service Arrangements (Cont'd)

6.2.5 (Reserved for Future Use)

6.2.6 (Reserved for Future Use)

TARIFF BRANCH
RECEIVED
7/17/2006
PUBLIC SERVICE
COMMISSION
OF KENTUCKY

ISSUED: JULY 17, 2006
BY: Vice President
Lexington, Kentucky

EFFECTIVE: AUGUST 1, 2006

ACCESS SERVICE

6. Switched Access Service (Cont'd)

6.2 Switched Access Service Arrangements (Cont'd)

6.2.7 (Reserved for Future Use)

6.2.8 (Reserved for Future Use)

TARIFF BRANCH
RECEIVED
7/17/2006
PUBLIC SERVICE
COMMISSION
OF KENTUCKY

ISSUED: JULY 17, 2006
BY: Vice President
Lexington, Kentucky

EFFECTIVE: AUGUST 1, 2006

ACCESS SERVICE

6. Switched Access Service (Cont'd)

6.2 Switched Access Service Arrangements (Cont'd)

6.2.9 (Reserved for Future Use)

TARIFF BRANCH
RECEIVED
7/17/2006
PUBLIC SERVICE
COMMISSION
OF KENTUCKY

ISSUED: JULY 17, 2006
BY: Vice President
Lexington, Kentucky

EFFECTIVE: AUGUST 1, 2006

ACCESS SERVICE

6. Switched Access Service (Cont'd)

6.2 Switched Access Service Arrangements (Cont'd)

6.2.10 800/877/888 Access Service

(A) Description

(1) 800/877/888 Access Service provides for the forwarding of end user dialed 800-NXX-XXXX, 877-NXX-XXXX or 888-NXX-XXXX calls to a customer via a Company designated switch capable of performing a customer identification function. The 800/877/888 Access Service customer identification function utilizes 800/877/888 Data Base Query Service, as described in 6.2.10(D), to screen all ten digits of all 800-NXX-XXXX, 877-NXX-XXXX or 888-NXX-XXXX type calls generated by end users to determine the customer to which the 800/877/888 call is routed by the Telephone Company.

The 800/877/888 Access Service customer identification function will be available at suitably equipped end office or access tandem switches. Once customer identification has been established, the call will be routed to the customer. 800/877/888 Access Service may be provided via 800/877/888 Access Service switched trunk groups or in conjunction with a customer's FGC or FGD Switched Access Service.

(2) 800/877/888 Access Service is an originating trunk side switched service that is available to the customer via 800/877/888 Access Service trunk(s) at Company designated switches capable of performing the 800/877/888 Access Service customer identification function. If the customer's 800/877/888 Access traffic originates from an end office switch not equipped to perform the 800/877/888 Access Service customer identification function, the call will be routed to the nearest office at which the function is available. Once customer identification has been established, the call will be routed to the customer.

Unless prohibited by technical limitations, the customer's 800/877/888 Access Service traffic may, at the option of the customer, be combined in the same trunk group arrangement with the customer's FGC or FGD Access Service traffic. When required by technical limitations a separate trunk group must be established for 800/877/888 Access Service.

TARIFF BRANCH
RECEIVED
7/17/2006
PUBLIC SERVICE
COMMISSION
OF KENTUCKY

ISSUED: JULY 17, 2006
BY: Vice President
Lexington, Kentucky

EFFECTIVE: AUGUST 1, 2006

ACCESS SERVICE

6. Switched Access Service (Cont'd)

6.2 Switched Access Service Arrangements (Cont'd)

6.2.10 800/877/888 Access Service (Cont'd)

(A) Description (Cont'd)

(3) 800/877/888 Access Service is provided as trunk side switching through the use of end office or access tandem switch trunk equipment. 800/877/888 Access Service originating from equal access end offices with the 800/877/888 Access Service customer identification function will be provided using Feature Group D signaling as set forth in 6.2.4 (A)(2) and (3). When Feature Group D signaling is provided, ANI will be provided in the same manner in which ANI is provided for Feature Group D as set forth in 6.3.2 (F).

800/877/888 Access Service originating from end offices not having equal access capabilities will be provided using Feature Group C signaling as set forth in 6.2.3 (A)(2) and (3). When Feature Group C signaling is provided, ANI will be provided in the same manner in which ANI is provided for Feature Group C as set forth in 6.3.2(F).

TARIFF BRANCH
RECEIVED
7/17/2006
PUBLIC SERVICE
COMMISSION
OF KENTUCKY

ISSUED: JULY 17, 2006
BY: Vice President
Lexington, Kentucky

EFFECTIVE: AUGUST 1, 2006

ACCESS SERVICE

6. Switched Access Service (Cont'd)

6.2 Switched Access Service Arrangements (Cont'd)

6.2.10 800/877/888 Access Service (Cont'd)

(B) Optional Features

(1) Common Switching Optional Features

(a) Automatic Number Identification (ANI)
(b) Dial Pulse Address Signaling
(c) Revertive Pulse Address Signaling
(d) Delay Dial Start-Pulsing Signaling
(e) Immediate Dial Pulse Address Signaling
(f) Panel Call Indicator Address Signaling
(g) Alternate Traffic Routing
(h) SS7 Out of Band Signaling

(2) Local Transport Optional Features

(a) Supervisory Signaling

(C) Transmission Specifications

(1) Non-Converted End Offices

In end offices that have not been converted to equal access, 800/877/888 Access Service is provided with either Type B or Type C Transmission Specifications as follows:

- When routed directly to the end office either Type B or Type C is provided.

- When routed to an access tandem only Type B is provided.

- Type B or Type C is provided on the transmission path from the access tandem to the end office.

Type C Transmission Specifications are provided with Interface Group 1 when routed directly to an end office. Type B is provided with Interface Groups 2 through 10, whether routed directly to an end office or to a Telephone Company access tandem.

TARIFF BRANCH
RECEIVED
7/17/2006
PUBLIC SERVICE
COMMISSION
OF KENTUCKY

ISSUED: JULY 17, 2006
BY: Vice President
Lexington, Kentucky

EFFECTIVE: AUGUST 1, 2006

ACCESS SERVICE

6. Switched Access Service (Cont'd)

6.2 Switched Access Service Arrangements (Cont'd)

6.2.10 800/877/888 Access Service (Cont'd)

(C) Transmission Specifications (Cont'd)

(1) Non Converted End Offices (Cont'd)

Type DB Data Transmission Parameters are provided with 800/ 877/888 Access Service for the transmission path between the customer's premises and the end office when directly routed to the end office, and Type DB Data Transmission Parameters are provided for the transmission path between the customer's premises and the access tandem and between the access tandem and the end office when routed via a Telephone Company access tandem.

(2) Equal Access End Offices

In end offices converted to equal access, 800/877/888 Access Service is provided with either Type A, Type B or Type C Transmission Specifications as follows:

- When routed directly to the end office either Type B or C is provided.

- When routed to a Telephone Company access tandem only Type A is provided.

- Type A is provided on the transmission path from the Telephone Company access tandem to the end office.

Type C Transmission specifications are provided with Interface Group 1. Type A and B Transmission Specifications are provided with Interface Groups 2 through 10.

Type DA Data Transmission Parameters are provided for the transmission path between the customer's premises and the Telephone Company access tandem and between the Telephone Company access tandem and the end office. Type DB Data Transmission Parameters are provided for the transmission path between the customer's premises and the end office when directly routed to the end office.

TARIFF BRANCH
RECEIVED
7/17/2006
PUBLIC SERVICE
COMMISSION
OF KENTUCKY

ISSUED: JULY 17, 2006
BY: Vice President
Lexington, Kentucky

EFFECTIVE: AUGUST 1, 2006

ACCESS SERVICE

6. Switched Access Service (Cont'd)

6.2 Switched Access Service Arrangements (Cont'd)

6.2.10 800/877/888 Access Service (Cont'd)

(D) 800/877/888 Data Base Query Service

(1) 800/877/888 Data Base Query Service, offered in conjunction with 800/877/888 Access Service, performs the 800/877/888 customer identification function, as described in 6.2.5(A)(1), to determine the customer to whom 800/877/888 calls must be routed. For all 1+800-NXX-XXXX, 1+877-NXX-XXXX or 1+888-NXX-XXXX calls, originated by an end user, the Telephone Company will perform the customer identification function using a Telephone Company 800/877/888 Data Base to screen the dialed ten digits of the 800/877/888 call to determine the customer selected by the 800/877/888 subscriber to carry that 800/877/888 call. If the 800/877/888 call originates from an end office switch not equipped to provide the customer identification function, the call will be routed to an access tandem switch equipped to provide the customer identification function. Once customer identification has been established through 800/877/888 Data Base Query Service, the 800/877/888 call will be routed to the selected customer for completion.

(2) Basic 800/877/888 Data Base Queries provide instructions to route 1+800-NXX-XXXX, 1+877-NXX-XXXX or 1+888-NXX-XXXX calls on a simple call turn around basis to one particular customer or to different customers based on the LATA in which the 800/877/888 call originates.

(3) Premium 800/877/888 Data Base Queries provide instructions to route 1+800-NXX-XXXX, 1+877-NXX-XXXX or 1+888-NXX-XXXX calls to:

(a) Different customers based on time of day, day of week, or based on number of calls allocated by 800/877/888 subscriber selected percentages.

(b) Different terminating locations based on time of day, day of week, or based on number of calls allocated by 800/877/888 subscriber selected percentages.

(c) Standard seven digit local exchange telephone numbers at the terminating end based on the 800/877/888 subscriber's specific requirements.

The 800/877/888 subscriber is responsible for arranging the entry of the various routing instructions discussed herein into the Number Administration Service Center's (NASC's) Service Management System (SMS).

Rate regulations and charges applicable to 800/877/888 Data Base Query Service appear in 6.5.3(C) and 6.6.

TARIFF BRANCH
RECEIVED
7/17/2006
PUBLIC SERVICE
COMMISSION
OF KENTUCKY

ISSUED: JULY 17, 2006
BY: Vice President
Lexington, Kentucky

EFFECTIVE: AUGUST 1, 2006

ACCESS SERVICE

6. Switched Access Service (Cont'd)

6.2 Switched Access Service Arrangements (Cont'd)

6.2.11 900 Access Service

(A) Description

(1) 900 Access Service is an originating trunk side service that provides for the forwarding of end user dialed 900-NXX-XXXX calls to a customer via a Telephone Company designated switch capable of performing a customer identification function. The customer identification function determines the customer to which the 900 call is routed by the Telephone Company.

The customer identification function will be available at suitably equipped end office or Telephone Company access tandems. Once customer identification has been established, the call will be routed to the customer. 900 Access Service may be provided via 900 Access Service switched trunk groups or in conjunction with a customer's FGC or FGD Switched Access Service.

(2) If the customer's 900 Access traffic originates from an end office not equipped to perform the customer identification function, the call will be routed to the nearest office at which the function is available. Once customer identification has been established, the call will be routed to the customer.

Unless prohibited by technical limitations, the customer's 900 Access Service traffic may, at the option of the customer, be combined in the same trunk group arrangement as the customer's FGC or FGD Access Service traffic. When required by technical limitations a separate trunk group must be established for 900 Access Service.

TARIFF BRANCH
RECEIVED
7/17/2006
PUBLIC SERVICE
COMMISSION
OF KENTUCKY

ISSUED: JULY 17, 2006
BY: Vice President
Lexington, Kentucky

EFFECTIVE: AUGUST 1, 2006

ACCESS SERVICE

6. Switched Access Service (Cont'd)

6.2 Switched Access Service Arrangements (Cont'd)

6.2.11 900 Access Service (Cont'd)

(A) Description (Cont'd)

(3) 900 Access Service is provided as trunk side switching through the use of end offices or Telephone Company access tandems. 900 Access Service originating from equal access end offices with the customer identification function will be provided using Feature Group D signaling as set forth in 6.2.4 (A)(2) and (3). When Feature Group D signaling is provided, ANI will be provided in the same manner in which ANI is provided for Feature Group D as set forth in 6.3.2 (F).

900 Access Service originating from end offices not having equal access capabilities will be provided using Feature Group C Signaling as set forth in 6.2.3(A)(2) and (3). When Feature Group C signaling is provided, ANI will be provided in the same manner in which ANI is provided for Feature Group C as set forth in 6.3.2(F).

In cases where 900 Access Service will be used for mass calling events, the customer is required to provide notice of the event to the Telephone Company. Notification must be provided at least two business days prior to the event. As a result of such notification, the Company may implement protective controls to ensure acceptable service levels.

Failure to notify the Telephone Company of such events may subject the 900 Access Service to discontinuance as specified in Section 2.2.1 preceding.

Calls to a 900 number dialed via 1+ from coin telephones, 101XXXX, Inmate Service and Hotel/Motel Service will be blocked. Calls to a 900 number dialed via 0+ or 0- will be blocked. Calls to a 900 numbers dialed via 0+ from end offices converted to equal access will be unblocked if an ASR requesting unblocking is submitted to the Telephone Company by the customer.

TARIFF BRANCH
RECEIVED
7/17/2006
PUBLIC SERVICE
COMMISSION
OF KENTUCKY

ISSUED: JULY 17, 2006
BY: Vice President
Lexington, Kentucky

EFFECTIVE: AUGUST 1, 2006

ACCESS SERVICE

6. Switched Access Service (Cont'd)

6.2 Switched Access Service Arrangements (Cont'd)

6.2.11 900 Access Service (Cont'd)

(B) Optional Features

(1) Common Switching Optional Features

(a) Automatic Number Identification (ANI)
(b) Dial Pulse Address Signaling
(c) Revertive Pulse Address Signaling
(d) Delay Dial Start-Pulsing Signaling
(e) Immediate Dial Pulse Address Signaling
(f) Panel Call Indicator Address Signaling
(g) Alternate Traffic Routing
(h) SS7 Out of Band Signaling
(i) Customer Identification Function

(2) Local Transport Optional Features

(a) Supervisory Signaling

(C) Transmission Specifications

(1) Non-Converted End Offices

In end offices that have not been converted to equal access, 900 Access Service is provided with either Type B or Type C Transmission Specifications as follows:

- When routed directly to the end office either Type B or Type C is provided.

- When routed to a Telephone Company access tandem only Type B is provided.

- Type B or Type C is provided on the transmission path from the access tandem to the end office.

Type C Transmission Specifications are provided with Interface Group 1 when routed directly to an end office. Type B is provided with Interface Groups 2 through 10, whether routed directly to a Telephone Company end office or to an access tandem.

TARIFF BRANCH
RECEIVED
7/17/2006
PUBLIC SERVICE
COMMISSION
OF KENTUCKY

ISSUED: JULY 17, 2006
BY: Vice President
Lexington, Kentucky

EFFECTIVE: AUGUST 1, 2006

ACCESS SERVICE

6. Switched Access Service (Cont'd)

6.2 Switched Access Service Arrangements (Cont'd)

6.2.11 900 Access Service (Cont'd)

(C) Transmission Specifications (Cont'd)

(1) Non Converted End Offices (Cont'd)

Type DB Data Transmission Parameters are provided with 900 Access Service for the transmission path between the customer's premises and the end office when directly routed to the end office, and Type DB Data Transmission Parameters are provided for the transmission path between the customer's premises and the Telephone Company access tandem and between the access tandem and the end office when routed via a Telephone Company access tandem.

(2) Equal Access End Offices

In end offices converted to equal access, 900 Access Service is provided with either Type A, Type B or Type C Transmission Specifications as follows:

- When routed directly to the end office either Type B or C is provided.

- When routed to a Telephone Company access tandem only Type A is provided.

- Type A is provided on the transmission path from the Telephone Company access tandem to the end office.

Type C Transmission specifications are provided with Interface Group 1. Type A and B Transmission Specifications are provided with Interface Groups 2 through 10.

Type DA Data Transmission Parameters are provided for the transmission path between the customer's premises and the Telephone Company access tandem and between the Telephone Company access tandem and the end office. Type DB Data Transmission Parameters are provided for the transmission path between the customer's premises and the end office when directly routed to the end office.

TARIFF BRANCH
RECEIVED
7/17/2006
PUBLIC SERVICE
COMMISSION
OF KENTUCKY

ISSUED: JULY 17, 2006
BY: Vice President
Lexington, Kentucky

EFFECTIVE: AUGUST 1, 2006

ACCESS SERVICE

6. Switched Access Service (Cont'd)

6.2 Switched Access Service Arrangements (Cont'd)

6.2.12 (Reserved for Future Use)

6.2.13 500 Access Service

(A) Description

(1) 500 Access Service is an originating trunk side service that provides for the forwarding of end user dialed 500-NXX-XXXX calls to a customer via a Telephone Company designated switch capable of performing a customer identification function. The customer identification function determines the customer to which the 500 call is routed by the Telephone Company.

The customer identification function will be available at suitably equipped end office or Telephone Company access tandem switches. Once customer identification has been established, the call will be routed to the customer. 500 Access Service may be provided via 500 Access Service switched trunk groups or in conjunction with a customer's FGC or FGD, Switched Access Service.

(2) If the customer's 500 Access traffic originates from an end office switch not equipped to perform the customer identification function, the call will be routed to the nearest office at which the function is available. Once customer identification has been established, the call will be routed to the customer.

Unless prohibited by technical limitations, the customer's 500 Access Service traffic may, at the option of the customer, be combined in the same trunk group arrangement as the customer's FGC or FGD Access Service traffic. When required by technical limitations a separate trunk group must be established for 500 Access Service.

(3) 500 Access Service is provided as trunk side switching through the use of end office or Telephone Company access tandem switch trunk equipment. 500 Access Service originating from equal access end offices with the customer identification function will be provided using Feature Group D signaling as set forth in 6.2.4(A)(2) and (3). When Feature Group D signaling is provided, ANI will be provided in the same manner in which ANI is provided for Feature Group D as set forth in 6.3.2(F).

500 Access Service originating from end offices not having equal access capabilities will be provided using Feature Group C Signaling as set forth in 6.2.3(A)(2) and (3). When Feature Group C signaling is provided, ANI will be provided in the same manner in which ANI is provided for Feature Group C as set forth in 6.3.2(F).

TARIFF BRANCH
RECEIVED
7/17/2006
PUBLIC SERVICE
COMMISSION
OF KENTUCKY

ISSUED: JULY 17, 2006
BY: Vice President
Lexington, Kentucky

EFFECTIVE: AUGUST 1, 2006

ACCESS SERVICE

6. Switched Access Service (Cont'd)

6.2 Switched Access Service Arrangements (Cont'd)

6.2.13 500 Access Service (Cont'd)

(B) Optional Features

(1) Common Switching Optional Features

(a) Automatic Number Identification (ANI)
(b) Dial Pulse Address Signaling
(c) Revertive Pulse Address Signaling
(d) Delay Dial Start-Pulsing Signaling
(e) Immediate Dial Pulse Address Signaling
(f) Panel Call Indicator Address Signaling
(g) Alternate Traffic Routing
(h) SS7 Out of Band Signaling
(i) Customer Identification Function

(2) Local Transport Optional Features

(a) Supervisory Signaling

(C) Transmission Specifications

(1) Non-Converted End Offices

In end offices that have not been converted to equal access, 500 Access Service is provided with either Type B or Type C Transmission Specifications as follows:

- When routed directly to the end office either Type B or Type C is provided.

- When routed to a Telephone Company access tandem only Type B is provided.

- Type B or Type C is provided on the transmission path from the Telephone Company access tandem to the end office.

Type C Transmission Specifications are provided with Interface Group 1 when routed directly to an end office. Type B is provided with Interface Groups 2 through 10, whether routed directly to an end office or to a Telephone Company access tandem.

Type DB Data Transmission Parameters are provided with 500 Access Service for the transmission path between the customer's premises and the end office when directly routed to the end office, and Type DB Data Transmission Parameters are provided for the transmission path between the customer's premises and a Telephone Company access tandem and between the Telephone Company access tandem and the end office when routed via a access tandem.

TARIFF BRANCH
RECEIVED
7/17/2006
PUBLIC SERVICE
COMMISSION
OF KENTUCKY

ISSUED: JULY 17, 2006
BY: Vice President
Lexington, Kentucky

EFFECTIVE: AUGUST 1, 2006

ACCESS SERVICE

6. Switched Access Service (Cont'd)

6.2 Switched Access Service Arrangements (Cont'd)

6.2.13 500 Access Service (Cont'd)

(C) Transmission Specifications (Cont'd)

(2) Equal Access End Offices

In end offices converted to equal access, 500 Access Service is provided with either Type A, Type B or Type C Transmission Specifications as follows:

- When routed directly to the end office either Type B or C is provided.

- When routed to a Telephone Company access tandem only Type A is provided.

- Type A is provided on the transmission path from the Telephone Company access tandem to the end office.

Type C Transmission specifications are provided with Interface Group 1. Type A and Type B Transmission Specifications are provided with Interface Groups 2 through 10.

Type DA Data Transmission Parameters are provided for the transmission path between the customer's premises and the Telephone Company access tandem and between the Telephone Company access tandem and the end office. Type DB Data Transmission Parameters are provided for the transmission path between the customer's premises and the end office when directly routed to the end office.

6.2.14 (Reserved for Future Use)

TARIFF BRANCH
RECEIVED
7/17/2006
PUBLIC SERVICE
COMMISSION
OF KENTUCKY

ISSUED: JULY 17, 2006
BY: Vice President
Lexington, Kentucky

EFFECTIVE: AUGUST 1, 2006

ACCESS SERVICE

6. Switched Access Service (Cont'd)

6.3 Optional Features

Following are descriptions of the various optional features that are available in lieu of, or in addition to, the standard features provided with Switched Access Services. They are provided as either Local Transport, Common Switching or Transport Termination options.

6.3.1 Local Transport Optional Features

(A) Supervisory Signaling

Where the transmission parameters permit, and where signaling conversion is required by the customer to meet its signaling capability, the customer may order an optional supervisory signaling arrangement for each transmission path provided as follows:

- For Interface Groups 1 and 2

DX Supervisory Signaling,
E&M Type I Supervisory Signaling,
E&M Type II Supervisory Signaling, or
E&M Type III Supervisory Signaling

- For Interface Group 2

SF Supervisory Signaling, or
Tandem Supervisory Signaling

- For Interface Groups 6 through 10

At the option of the customer, these Interface Groups may be provided with individual transmission path SF supervisory signaling where such signaling is available in Telephone Company central offices. Generally such signaling is available only where the entry switch provides an analog (i.e., non digital) interface to the transport termination.

These optional supervisory signaling arrangements are not available in conjunction with Signaling System 7 (SS7) Out of Band Signaling.

(B) Customer Specified Entry Switch Receive Level

This feature allows the customer to specify the receive transmission level at the first point of switching. The range of transmission level which may be specified is described in Technical Reference TR-NPL-000334. This feature is available with Interface Groups 2 through 10 for FGA and FGB.

TARIFF BRANCH
RECEIVED
7/17/2006
PUBLIC SERVICE
COMMISSION
OF KENTUCKY

ISSUED: JULY 17, 2006
BY: Vice President
Lexington, Kentucky

EFFECTIVE: AUGUST 1, 2006

ACCESS SERVICE

6. Switched Access Service (Cont'd)

6.3 Optional Features (Cont'd)

6.3.2 Common Switching Optional Features

(A) Call Denial on Line or Hunt Group

This option allows for the screening of terminating Feature Group A calls. The following screening arrangements are available with this option:

(1) Screening of terminating calls for completion to only 411, 611, 911, 555-1212 all valid NXXs associated with the end offices within the LATA, i.e., the call cannot be further switched or routed out of the LATA.

(2) Screening of terminating calls within the Feature Group A Access Area for completion to only 411, 611, 911, 800, 877, 888, 555-1212, and a Telephone Company specified set of NXXs within the Telephone Company local exchange calling area of the dial tone office in which the arrangement is provided.

All other calls are routed to a reorder tone or recorded announcement. Arrangement 1 is provided where available. Arrangement 2 is provided in all Telephone Company electronic end offices and, where available, in electromechanical end offices. These options are available with Feature Group A.

TARIFF BRANCH
RECEIVED
7/17/2006
PUBLIC SERVICE
COMMISSION
OF KENTUCKY

ISSUED: JULY 17, 2006
BY: Vice President
Lexington, Kentucky

EFFECTIVE: AUGUST 1, 2006

ACCESS SERVICE

6. Switched Access Service (Cont'd)

6.3 Optional Features (Cont'd)

6.3.2 Common Switching Optional Features (Cont'd)

(B) Service Code Denial on Line or Hunt Group

This option allows for the screening of terminating calls 0-, 555 and N11 (e.g., 411, 611 and 911). This feature is provided where available in all Telephone Company electronic end offices and electromechanical end offices. It is available with Feature Group A.

(C) Hunt Group Arrangement

The Hunt Group Arrangement is available with FGA as a nonchargeable option.

This option provides for:

- the ability to sequentially access one of two or more line side connections in the originating direction, when the access code of the line group is dialed, and

- the ability to sequentially access a one or two more Voice Grade circuits (e.g., 800/877/888 service circuits) in the terminating direction, when the hunting number of the line group is forwarded from the customer to the Telephone Company.

TARIFF BRANCH
RECEIVED
7/17/2006
PUBLIC SERVICE
COMMISSION
OF KENTUCKY

ISSUED: JULY 17, 2006
BY: Vice President
Lexington, Kentucky

EFFECTIVE: AUGUST 1, 2006

ACCESS SERVICE

6. Switched Access Service (Cont'd)

6.3 Optional Features (Cont'd)

6.3.2 Common Switching Optional Features (Cont'd)

(D) Uniform Call Distribution Arrangement

This option provides a type of multiline hunting arrangement which provides for an even distribution of calls among the available lines in a hunt group. Where available, this feature is provided in Telephone Company electronic end offices only. It is available for originating use with Feature Group A and for terminating use with Special Access used with a Switched Access Interface.

(E) Nonhunting Number for Use with Hunt Group or Uniform Call Distribution Arrangement

This option provides an arrangement for an individual line within a multiline hunt or uniform call distribution group that provides access to that line within the hunt or uniform call distribution group when it is idle or provides busy tone when it is busy, when the nonhunting number is dialed. Where available, this feature is provided in Telephone Company electronic end offices only. It is available with Feature Group A utilizing uniform Call Distribution, and Special Access lines used with a Switched Access Interface.

(F) Automatic Number Identification (ANI)

This option provides the automatic transmission of a seven or ten digit number and information digits to the customer's premises for calls originating in the Access area to identify the calling station. The ANI feature is an end office software function which is associated on a call-by-call basis with (1) all individual transmission paths in a trunk group routed directly between an end office and a customer's premises or, where technically feasible, with (2) all individual transmission paths in a trunk group between an end office and a Telephone Company access tandem, and a trunk group between a Telephone Company access tandem and a customer's premises. When Feature Group D is provided with SS7 Out of Band Signaling, the customer may obtain an ANI equivalent by ordering the Charge Number optional feature as described in 6.3.2(Z).

These information digits shall only be used for billing and collection, routing, screening, and completion of the originating subscriber's call or transaction or for service directly related to the originating subscriber's call or transaction.

The ANI provided shall not be reused or resold without first notifying the originating telephone subscriber and obtaining affirmative consent of the subscriber for reuse or resale.

Unless the originating subscriber has given consent for the reuse or resale, any information provided shall not be used for any purpose other than:

- performing the services or transactions that are subject of the originating subscriber's call;
- ensuring network performance security, and the effectiveness of call delivery;
- compiling, using and disclosing aggregate information; and,
- complying with applicable laws.

TARIFF BRANCH
RECEIVED
7/17/2006
PUBLIC SERVICE
COMMISSION
OF KENTUCKY

ISSUED: JULY 17, 2006
BY: Vice President
Lexington, Kentucky

EFFECTIVE: AUGUST 1, 2006

ACCESS SERVICE

6. Switched Access Service (Cont'd)

6.3 Optional Features (Cont'd)

6.3.2 Common Switching Optional Features (Cont'd)

(F) Automatic Number Identification (ANI) (Cont'd)

The above restrictions shall not prevent the subscriber to the ANI Arrangement from using information acquired from an ANI Arrangement, such as the telephone number or information derived from analysis of the characteristics of calls received through the ANI Arrangement, to offer a product or service that is directly related to the products or services previously purchased by a customer of the ANI Arrangement subscriber.

The seven digit ANI telephone number is available with Feature Groups B and C. With these Feature Groups, technical limitations may exist in Telephone Company switching facilities which require ANI to be provided only on a directly trunked basis. ANI will be transmitted on all calls except those originating from multiparty lines, coin stations and coinless pay telephones using Feature Group B, or when an ANI failure has occurred.

TARIFF BRANCH
RECEIVED
7/17/2006
PUBLIC SERVICE
COMMISSION
OF KENTUCKY

ISSUED: JULY 17, 2006
BY: Vice President
Lexington, Kentucky

EFFECTIVE: AUGUST 1, 2006

ACCESS SERVICE

6. Switched Access Service (Cont'd)

6.3 Optional Features (Cont'd)

6.3.2 Common Switching Optional Features (Cont'd)

(F) Automatic Number Identification (ANI) (Cont'd)

The ten digit ANI telephone number is only available with Feature Group D and where the technical capability exists, Feature Group B. The ten digit ANI telephone number consists of the Number Plan Area (NPA) plus the seven digit ANI telephone number. The ten digit ANI telephone number will be transmitted on all calls except those identified as multi-party line or ANI failure, in which case only the NPA will be transmitted (in addition to the information digit described below).

For FGD where technical capabilities exist, ANI may be ordered on a class of service (type of call) basis, rather than the trunk group on which the call is routed. Class of service as defined here means: A) Service type B) Line Class of Service (e.g., Hotel/Motel, Coin); c) Service Access Code (SAC) e.g., 800, 877, 888 or 900); D) Prefix dialed (0+, 0-, 00-, 01+, 011+); or any combination of A through D.

With Feature Group C, ANI is provided from end offices at which Company recording for end user billing is not provided, or where it is not required, as with 800, 877, 888 or 900 Access Service. It is not provided from end offices for which the Company needs to forward ANI to its recording equipment.

Where ANI cannot be provided, e.g., on calls from 4 and 8 party services, information digits will be provided to the customer.

The information digits identify: (1) telephone number is the station billing number - no special treatment required, (2) multiparty line - telephone number is a 4- or 8-party line and cannot be identified - number must be obtained via an operator or in some other manner, (3) ANI failure has occurred in the end office switch which prevents identification of calling telephone number - must be obtained by operator or in some other manner, (4) hotel/motel originated call which requires room number identification, (5) coinless station,

TARIFF BRANCH
RECEIVED
7/17/2006
PUBLIC SERVICE
COMMISSION
OF KENTUCKY

ISSUED: JULY 17, 2006
BY: Vice President
Lexington, Kentucky

EFFECTIVE: AUGUST 1, 2006

ACCESS SERVICE

6. Switched Access Service (Cont'd)

6.3 Optional Features (Cont'd)

6.3.2 Common Switching Optional Features (Cont'd)

(F) Automatic Number Identification (ANI) (Cont'd)

hospital, inmate, etc. call which requires special screening or handling by the customer, and (6) call is an Automatic Identified Outward Dialed (AIOD) call from customer premises equipment. The ANI telephone number is the listed telephone number of the customer and is not the telephone number of the calling party.

These ANI information digits are available with Feature Groups B, C, and D.

Additional ANI information digits are available with Feature Group D only. They include:

(1) InterLATA restricted - telephone number is identified line

(2) InterLATA restricted - hotel/motel line

(3) InterLATA restricted - coinless, hospital, inmate, etc., line

These information digits will be transmitted as agreed to by the customer and the Telephone Company.

(G) Up to 7 Digit Outpulsing of Access Digits to Customer

This option provides for the end office capability of providing up to 7 digits of the uniform access code (950-XXXX) to the customer's premises. The customer can request that only some of the digits in the access code be forwarded. The access code digits would be provided to the customer's premises using multifrequency signaling, and transmission of the digits would precede the forwarding of ANI if that feature were provided. It is available with Feature Group B.

TARIFF BRANCH
RECEIVED
7/17/2006
PUBLIC SERVICE
COMMISSION
OF KENTUCKY

ISSUED: JULY 17, 2006
BY: Vice President
Lexington, Kentucky

EFFECTIVE: AUGUST 1, 2006

ACCESS SERVICE

6. Switched Access Service (Cont'd)

6.3 Optional Features (Cont'd)

6.3.2 Common Switching Optional Features (Cont'd)

(H) Revertive Pulse Address Signaling

This option provides for a dc pulsing arrangement that transmits intelligence in the following manner:

(1) The equipment at the originating location presets itself to represent the number of pulses required and to count the pulses received from the terminating location.

(2) The equipment at the terminating location transmits a series of pulses by the momentary grounding of its battery supply until the originating location breaks the dc path to indicate that the required number of pulses has been counted.

This option is available with FGC, 800/877/888 Access Service and 900 Access Service.

(I) Delay Dial Start-Pulsing Signaling

This option provides a method of indicating to the near end trunk circuit readiness to accept address signaling information by the far end trunk circuit. Delay dial is often referred to as an off-hook interval and the start-pulsing signal is the on-hook interval. With integrity check, the calling office will not outpulse until a delay dial (off-hook) signal followed by a start-pulsing (on-hook) signal has been identified at the calling office. This option is available with FGC, 800/877/888 Access Service and 900 Access Service.

(J) Immediate Dial Pulse Address Signaling

This option provides for the forwarding of dial pulses from the Telephone Company end office to the customer without the need of a start-pulsing signal from the customer. It is available with FGC, 800/877/888 Access Service and 900 Access Service.

TARIFF BRANCH
RECEIVED
7/17/2006
PUBLIC SERVICE
COMMISSION
OF KENTUCKY

ISSUED: JULY 17, 2006
BY: Vice President
Lexington, Kentucky

EFFECTIVE: AUGUST 1, 2006

ACCESS SERVICE

6. Switched Access Service (Cont'd)

6.3 Optional Features (Cont'd)

6.3.2 Common Switching Optional Features (Cont'd)

(K) Dial Pulse Address Signaling

This trunk side option provides for the transmission of number information, e.g., called number, between the end office switching system and the customer's premises (in either direction) by means of direct current pulses. It is available with FGC, 800/877/888 Access Service and 900 Access Service.

(L) Panel Call Indicator Address Signaling

This option provides a dc pulsing arrangement in which each digit is transmitted as a series for four marginal and polarized impulses. It is available with FGC, 800/877/888 Access Service and 900 Access Service.

(M) Service Class Routing

This option provides the capability of directing originating traffic from an end office to a trunk group to a customer designated premises, based on the line class of service (e.g., coin, multiparty or hotel/motel), service prefix indicator (e.g., 0-, 0+, 01+ or 011+) or service access code (e.g., 800, 877, 888 or 900). When a customer orders service class routing, it must report the appropriate codes to be instituted in each end office or Telephone Company access tandem switch. Originating 800-NXX-XXXX, 877-NXX-XXXX or 888-NXX-XXXX calls are routed in accordance with the 800/877/888 customer identification function described in 6.2.5(A)(1). It is provided in suitably equipped end office or Telephone Company access tandem switches and is available with FGC and FGD.

(N) Alternate Traffic Routing

This option provides the capability of directing originating traffic from an end office (or appropriately equipped Telephone Company access tandem) to a trunk group (the "high usage" group) to a customer designated premises until that group is fully loaded, and then delivering additional originating traffic (the "overflowing" traffic) from the same end office or Telephone Company access tandem to a different trunk group (the "final" group) to a second customer designated premises. The customer shall specify the last trunk CCS desired for the high usage group. It is provided in suitably equipped end office or Telephone Company access tandem switches and is available with Feature Groups C, D, 800/877/888 Access Service and 900 Access Service.

TARIFF BRANCH
RECEIVED
7/17/2006
PUBLIC SERVICE
COMMISSION
OF KENTUCKY

ISSUED: JULY 17, 2006
BY: Vice President
Lexington, Kentucky

EFFECTIVE: AUGUST 1, 2006

ACCESS SERVICE

6. Switched Access Service (Cont'd)

6.3 Optional Features (Cont'd)

6.3.2 Common Switching Optional Features (Cont'd)

(O) Trunk Access Limitation

This option provides for the routing of originating 900 service calls to a specified number of transmission paths in a trunk group, in order to limit (choke) the completion of such traffic to the customer. Calls to the designated service which could not be completed over the subset of transmission paths in the trunk group, i.e., the choked calls, would be routed to reorder tone. It is provided in all Telephone Company electronic end offices and where available in electromechanical end offices. The customer must specify the number of trunks to be instituted in each end office or Telephone Company access tandem switch for each arrangement ordered. It is available with FGC, FGD, and 900 Access Service.

(P) Call Gapping Arrangement

This option, provided in suitably equipped end office switches, provides for the routing of originating calls to 900 service to be switched in the end office to all transmission paths in a trunk group at a prescribed rate of flow, e.g., one call every five seconds, in order to limit (choke) the completion of such traffic to the customer. Calls to the designated service which are denied access by this feature, i.e., the choked calls, would be routed to a no-circuit announcement. The customer must specify the trunk groups affected and prescribed rate of flow in each end office or Telephone Company access tandem switch for each arrangement ordered. It is provided in selected FGD equipped end offices and is available only with FGD and 900 Access Service.

(Q) International Carrier Option

This option allows for FGD end office(s) or Telephone Company access tandem(s) equipped for International Direct Distance Dialing to be arranged to forward the international calls of one or more international carriers to the customer (i.e., the Telephone Company is able to route originating international calls to a customer other than one designated by the end user either through presubscription or 101XXXX dialing). This arrangement requires provision of written verification to the Telephone Company that the customer is authorized to forward such calls.

The written verification must be in the form of a letter of agency authorizing the customer to order the option on behalf of the international carrier. This option is only provided at Telephone Company

TARIFF BRANCH
RECEIVED
7/17/2006
PUBLIC SERVICE
COMMISSION
OF KENTUCKY

ISSUED: JULY 17, 2006
BY: Vice President
Lexington, Kentucky

EFFECTIVE: AUGUST 1, 2006

ACCESS SERVICE

6. Switched Access Service (Cont'd)

6.3 Optional Features (Cont'd)

6.3.2 Common Switching Optional Features (Cont'd)

(Q) International Carrier Option (Cont'd)

end offices or Telephone Company access tandems equipped for International Direct Distance Dialing. It is available with FGD.

(R) Non-Overlap Outpulsing

This option allows the customer to specify that all dialed digits must be received by the Telephone Company end office before any outpulsing takes place. After all dialed digits are received, the Telephone Company seizes a trunk toward the customer. This option is available with FGD where technically feasible.

(S) Cut-Through

This option allows end users to reach the customer's premises by dialing 101XXXX + #. This option provides for connection of the call to the premises of the customer indicated by the 101XXXX code upon receipt of the end of dialing the # digit. The Telephone Company will not record any other dialed digits for these calls. This option is available with FGD where technically feasible.

(T) Switched Access Interface

This arrangement provides the line switching and supervisory functions necessary to interface Voice Grade Special Access and Switched Access Services together for the provision of customer WATS and WATS-Type service. This service provides a transmission path capable of originating and/or terminating the customer's interstate and combined interstate/intrastate traffic. Combining of intrastate traffic will be provided in accordance with any individual state regulations as outlined in 6.3.2(T)(5).

This arrangement is only available from Telephone Company designated end offices which are identified as WATS Serving Offices (WSO) in NECA Tariff FCC No. 4. Technical limitations resident in certain end office switches may preclude the availability of certain Switched Access Interface features. Depending on the configuration selected below, the Telephone Company will provide such services from the closest WSO that is technically equipped to provide such services. Special Access Transport charges as described in 7.2.1(B) will be applicable to the WATS Serving Office appropriately equipped for the service feature requested.

The Switched Access portion of this arrangement is available from Section 6 of this tariff, except as set forth in (5) following, and provides connectivity from the Telephone Company's WATS Serving Office to the customer's premises. The Special Access portion of this feature is available from Section 7 of this tariff and provides connectivity from the Telephone Company's WATS Serving Office to the customer's end user.

Switched Access Interface Arrangements are provided with rotary dial or dual tone multifrequency address signaling and either loop start or ground start supervisory signaling. The choice of signaling is at the option of the customer. Switched Access Interface Arrangements are also available with extensions, i.e., terminations of the service at different buildings within the same or different LATA. All applicable Special Access rates, as set forth in 7. following, apply to such extensions.

TARIFF BRANCH
RECEIVED
7/17/2006
PUBLIC SERVICE
COMMISSION
OF KENTUCKY

ISSUED: JULY 17, 2006
BY: Vice President
Lexington, Kentucky

EFFECTIVE: AUGUST 1, 2006

ACCESS SERVICE

6. Switched Access Service (Cont'd)

6.3 Optional Features (Cont'd)

6.3.2 Common Switching Optional Features (Cont'd)

(T) Switched Access Interface (Cont'd)

Switched Access Interface Service is available in the following configurations/features:

(1) Originating Only Feature

The Originating Only feature is available from appropriately equipped WATS Serving Offices on a per line basis and provides for the transporting of interstate calls from a special access line to the customer via either FGA, FGB, FGC or FGD Switched Access. It is provided in the following two arrangements:

(a) Restricted Geographic Screening Arrangement - Originating Only

This arrangement provides the ability to screen a dialed number by NPA and/or NXX on the basis of a geographical band which is in accordance with an end user's service agreement with the customer. The geographical bands available are those in effect as of the effective date of this tariff provision. The customer must provide the Telephone Company with the band information required for each Special Access line subscribed to this service.

This arrangement is provided when used exclusively for interstate traffic (excluding international). This arrangement is not available for multi-jurisdictional traffic (combined interstate and intrastate) as set forth in 6.3.2(T)(1)(b).

This arrangement is available from appropriately equipped WATS Serving Offices in conjunction with FGC and FGD and provides for:

- the transporting of all interstate 1+NPA/NXX-XXXX and 1+FNPA-555-1212 calls to Directory Numbers that are associated with a customer selected geographic band to the customer;

- the blocking of all 1+NPA-NXX-XXXX and 1+FNPA-NXX-XXXX calls directed to Directory Numbers that do not lie within the geographic band selected by the customer;

- the blocking of all 1+500-NXX-XXXX, 0+500-NXX-XXXX, 1+700-NXX-XXXX, 1+800-NXX-XXXX, 1+877+NXX-XXXX, 1+888-NXX-XXXX and 1+900-NXX-XXXX calls;

- the blocking of all 0+NPA-NXX-XXXX calls;

- the transporting of all calls originated by dialing 0 (zero) to the Telephone Company operator;

- the transporting of all calls originated by dialing 00 (Zero, Zero) to the IC customer (available only with FGD);

- the blocking of all international calls preceded by the access codes 011 and 011; and

- the blocking of all calls preceded by the access code 101XXXX.

TARIFF BRANCH
RECEIVED
7/17/2006
PUBLIC SERVICE
COMMISSION
OF KENTUCKY

ISSUED: JULY 17, 2006
BY: Vice President
Lexington, Kentucky

EFFECTIVE: AUGUST 1, 2006

ACCESS SERVICE

6. Switched Access Service (Cont'd)

6.3 Optional Features (Cont'd)

6.3.2 Common Switching Optional Features (Cont'd)

(T) Switched Access Interface (Cont'd)

(1) Originating Only Feature (Cont'd)

(b) Unrestricted Arrangement - Originating Only

This arrangement is a multi-jurisdictional offering provided from a Telephone Company appropriately equipped WATS Serving Office and provides for the transporting of interstate and intrastate calls from a Special Access Line to the customer via FGA, FGB, FGC and/or FGD, Switched Access. FGA access is obtained from a WATS Serving Office by dialing a standard seven-digit number. FGB access is obtained from a WATS Serving Office by dialing 950-XXXX or 1+950-XXXX. The combining of interstate and intrastate traffic will be in accordance with 6.3.2(T)(5). This arrangement provides for transporting the following types of calls:

- 1+NPA-NXX-XXXX, 1+700-NXX-XXXX, and 1+FNPA-555-1212 calls to the IC customer or via facilities of the Telephone Company where state restrictions exist as detailed in 6.3.2(T)(5).

- 1+800-NXX-XXXX, 1+877-NXX-XXXX or 1+888-NXX-XXXX calls to the carrier in accordance with the 800/877/888 customer identification function described in 6.2.5(A)(1);

- 1+900-NXX-XXXX calls to the carrier in accordance with the 900 customer identification function described in 6.2.6(A)(1).

- 1+500-NXX-XXXX, 0+500-NXX-XXXX calls to the carrier in accordance with the 500 customer identification function described in 6.2.8(A)(1).

- 0+NPA-NXX-XXXX calls to the IC customer or via facilities of the Telephone Company where state restrictions exist as detailed in 6.3.2(T)(5) following;

- calls originated by dialing 0 (zero) to the Telephone Company operator;

- calls originated by dialing 00 (Zero, Zero) to the IC customer (available only with FGD);

- calls originated by dialing 01 or 011 to the IC customer; and

- 1+ or 0 (zero)+ NPA-NXX-XXXX calls preceded by the access code 101XXXX to the carrier designated by the dialed digits (available only with FGD).

Optional Access Code Arrangements

Subject to technical availability, on an individual line basis, calls preceded by the access code 101XXXX will be blocked.

TARIFF BRANCH
RECEIVED
7/17/2006
PUBLIC SERVICE
COMMISSION
OF KENTUCKY

ISSUED: JULY 17, 2006
BY: Vice President
Lexington, Kentucky

EFFECTIVE: AUGUST 1, 2006

ACCESS SERVICE

6. Switched Access Service (Cont'd)

6.3 Optional Features (Cont'd)

6.3.2 Common Switching Optional Features (Cont'd)

(T) Switched Access Interface (Cont'd)

(2) 800/877/888 Type Terminating Only Feature

The 800/877/888 Type Terminating Only feature is available on a per-line basis from appropriately equipped WATS Serving Offices and provides for the termination of all calls from the subscribing carrier (originated on a 1+800, 1+877 or 1+888 basis) directed to the Special Access via FGA, FGB, FGC and FGD, Switched Access.

(3) Combined Originating 800/877/888 Type Terminating Calling Feature

The Combined Originating/Terminating Calling feature is available on a per-line basis from appropriately equipped WATS Serving Offices and provides the functionalities of both the Originating Only and the 800/877/888 Type Terminating Only features.

The following matrix details the direction, call type, service prefix and traffic types provided on each Switched Access Interface Arrangement.

	Switched Access Interface Arrangements			
	Restricted Geographic Screening Arrangement	Unrestricted Arrangement	800/877/888 Type Terminating Only	Combined Originating/ 800/877/888 Type Terminating
Section Ref.	(T)(1)(a)	(T)(1)(b)	(T)(2)	(T)(3)
Directionality				
Originating Only	x	x		
Terminating Only			x	
Two-Way				x
Call Type (1+)				
Local	B	B	B	B
IntraLATA/Intrast.	B	R/D	C	R/D/C
IntraLATA/Interst.	D	D	C	D/C
InterLATA/Intrast.	B	D	C	D/C
InterLATA/Interst.	D	D	C	D/C
Service Prefix				
0-	R	R		R
00-	D	D		D
0+	B	D		D
IDDD	B	D		D
101XXXX	B	D/B		D/B
Traffic Type				
411	B	B		B
911	R	R		R
976	R	R		R
700	B	D		D
500/800/877/888/900	B	D		D

D = Telephone Company DELIVERS traffic to the customer.
R = Telephone Company RETAINS and completes traffic.
C = Telephone Company COMPLETES traffic to the end user's premises.
B = Telephone Company BLOCKS traffic to an announcement.

TARIFF BRANCH
RECEIVED
7/17/2006
PUBLIC SERVICE
COMMISSION
OF KENTUCKY

ISSUED: JULY 17, 2006
BY: Vice President
Lexington, Kentucky

EFFECTIVE: AUGUST 1, 2006

ACCESS SERVICE

6. Switched Access Service (Cont'd)

6.3 Optional Features (Cont'd)

6.3.2 Common Switching Optional Features (Cont'd)

(T) Switched Access Interface (Cont'd)

(5) Intrastate Traffic Restriction

An interstate Switched Access Interface and an intrastate Switched Access Interface must be ordered for the provisioning of multi-jurisdictional access.

Unless the customer subscribes to the 101XXXX blocking option offered in Section 6.3.2(T)(1)(b)i preceding, all calls carried over a Special Access Line used in conjunction with a Switched Access Interface for multi-jurisdictional access will be passed to the customer for completion.

TARIFF BRANCH
RECEIVED
7/17/2006
PUBLIC SERVICE
COMMISSION
OF KENTUCKY

ISSUED: JULY 17, 2006
BY: Vice President
Lexington, Kentucky

EFFECTIVE: AUGUST 1, 2006

ACCESS SERVICE

6. Switched Access Service (Cont'd)

6.3 Optional Features (Cont'd)

6.3.2 Common Switching Optional Features (Cont'd)

(U) Switched Data Service

(1) Switched 56

Switched Data Service provides for a connection capable of up to 56 Kbps digital transmission between a customer's premises and a suitably equipped end office. Switched Data service lines connected at those suitably equipped end offices may be accessed on a switched basis for digital transmission up to 56 Kbps. These locations are identified in the National Exchange Carrier Association, Tariff F.C.C. No. 4 Wire Center and Interconnection Information. Access is made via the standard FGD dialing pattern as described in Section 6.2.4(A)(6).

This option is available only with FGD. A separate FGD trunk must be established for the provision of Switched Data service. This trunk group requires the use of a DS1 digital interface (Interface Group 6) as described in Section 9.1.6. Switched Data and Non-switched Data traffic may not be combined on the same trunk group.

TARIFF BRANCH
RECEIVED
7/17/2006
PUBLIC SERVICE
COMMISSION
OF KENTUCKY

ISSUED: JULY 17, 2006
BY: Vice President
Lexington, Kentucky

EFFECTIVE: AUGUST 1, 2006

ACCESS SERVICE

6. Switched Access Service (Cont'd)

6.3 Optional Features (Cont'd)

6.3.2 Common Switching Optional Features (Cont'd)

(U) Switched Data Service (Cont'd)

(2) Switched 64

This option provides for a connection capable of up to 64 Kbps digital transmission with clear channel capability between the customer's CDL and a suitably equipped end office. Clear channel capability allows for full bandwidth availability to the customer with no part of the channel used for control, framing or signaling.

Switched 64 requires all digital facilities including the use of a DS1 digital interface as described in Section 9.1.6 and is available only with FGD from end offices capable of providing SS7 signaling, Bipolar with Eight Zero Substitution (B8ZS) line code format and Integrated Services Digital Network (ISDN) or other Switched Data based services. These locations are identified in the National Exchange Carrier Association, Inc., Tariff F.C.C. No. 4, Wire Center and Interconnection Information.

Access is made via the standard dialing pattern as set forth in Section 6.2.4(A)(G).

A separate FGD trunk group must be established for the provision of Switched 64 service.

Switched data and non-switched data traffic may not be combined on the same trunk group.

(V) Band Advance Arrangement

This option, which is provided in associated with two or more Switched Access Interface groups, provides for the automatic overflow of terminating calls to a Switched Access Interface group, when that group has exceeded its call capacity, to another Switched Access Interface group with a band designation equal to or greater than that of the overflowing Switched Access Interface group. This arrangement does not provide for call overflow from a group with a higher band designation to one with a lower one.

TARIFF BRANCH
RECEIVED
7/17/2006
PUBLIC SERVICE
COMMISSION
OF KENTUCKY

ISSUED: JULY 17, 2006
BY: Vice President
Lexington, Kentucky

EFFECTIVE: AUGUST 1, 2006

ACCESS SERVICE

6. Switched Access Service (Cont'd)

6.3 Optional Features (Cont'd)

6.3.2 Common Switching Optional Features (Cont'd)

(W) Signaling System 7 (SS7) Out of Band Signaling

This option is provided in conjunction with Common Channel Signaling System 7 (CCS7) Access Service and is only available with FGD, 500, 800, 877, 888 or 900 Access Service. CCS7 Access Service is provided pursuant to the terms and conditions set forth in GSTC Tariff FCC No. 1. SS7 Out of Band Signaling provides common channel out of band transmission of address and supervisory SS7 protocol signaling information between the end office or Telephone Company access tandem switching systems and the customer's premises. FGD Switched Access, 500, 800, 877, 888, and 900 Access service equipped with SS7 Out of Band Signaling are available with Interface Groups 6 (DS1), 7 (DS1C), and 9 (DS3). SS7 Out of Band Signaling is provided at suitably equipped Telephone Company end office or Telephone Company access tandem. The technical specifications for SS7 Out of Band Signaling are described in Bellcore Technical Reference Publication TR-TSV-000905.

(X) Calling Party Number (CPN) Parameter

The CPN parameter, available as a nonchargeable option for originating FGD with SS7 Out of Band Signaling, provides for the automatic transmission of the ten digit directory number, associated with a calling station, to the customer's premises for originating calls. The ten digit number consists of the NPA plus the seven digit telephone number which may or may not be the same number as the calling station's charge number. The CPN parameter also includes a "privacy indicator" which allows the ten digit telephone number to be coded as presented or restricted for delivery to the called end user. The technical specifications for CPN are described in Bellcore Technical Reference Publication TR-TSV-000905.

TARIFF BRANCH
RECEIVED
7/17/2006
PUBLIC SERVICE
COMMISSION
OF KENTUCKY

ISSUED: JULY 17, 2006
BY: Vice President
Lexington, Kentucky

EFFECTIVE: AUGUST 1, 2006

ACCESS SERVICE

6. Switched Access Service (Cont'd)

6.3 Optional Features (Cont'd)

6.3.2 Common Switching Optional Features (Cont'd)

(Y) Carrier Selection Parameter (CSP)

The CSP parameter, available as a nonchargeable option for originating FGD with SS7 Out of Band Signaling, provides for the automatic transmission of a signaling indicator which signifies to the customer whether or not a given call originated from a presubscribed line. If the line was presubscribed, the indicator will signify if the end user did or did not dial 101XXXX. The technical specifications for CSP are described in Bellcore Technical Reference Publication TR-TSV-000905.

(Z) Charge Number (CN) Parameter

The CN parameter, available as a nonchargeable option for originating FGD with SS7 Out of Band Signaling, is equivalent to the existing ten digit Automatic Number Identification (ANI) available with FGD with MF signaling. The CN parameter provides for the automatic transmission of the ten digit billing number of the calling station and the originating line information. The technical specifications for CN are described in Bellcore Technical Reference Publication TR-TSV-000905.

TARIFF BRANCH
RECEIVED
7/17/2006
PUBLIC SERVICE
COMMISSION
OF KENTUCKY

ISSUED: JULY 17, 2006
BY: Vice President
Lexington, Kentucky

EFFECTIVE: AUGUST 1, 2006

ACCESS SERVICE

6. Switched Access Service (Cont'd)

6.3 Optional Features (Cont'd)

6.3.2 Common Switching Optional Features (Cont'd)

(AA) (Reserved for Future Use)

(BB) FGD Switched Access with 950-XXXX Access

FGD Switched Access with 950-XXXX Access is a optional arrangement that provides for the routing of originating calls using a customer's 950-XXXX access code to the customer over the customer's FGD trunks. All such calls will be rated as FGD switched access calls.

This optional arrangement, available where technically feasible in equal access end offices, uses FGD signaling protocols and technical specifications. The 950-XXXX traffic can be routed over FGD trunks combined with the customer's standard FGD traffic directly to the CDL or through a Telephone Company access tandem to the CDL. The customer must be able to differentiate standard FGD calls from 950-XXXX calls delivered over the same FGD trunks. FGD Switched Access with 950-XXXX Access is not available with certain Telephone Company Access tandem switches when the signaling from an end office to the Telephone Company Access tandem is multifrequency address signaling and the signaling from the Telephone Company Access tandem to the CDL is SS7 Out of Band signaling. The customer may not have originating FGD switched access with 950-XXXX access and originating FGB switched access in the same end office utilizing the same 950-XXXX Customer Identification Code.

(CC) Carrier Identification Parameter (CIP)

Carrier Identification Parameter is available as an optional feature in conjunction with originating FGD with SS7 Out of Band Signaling. CIP provides for the transmission of the Carrier Identification Code (CIC) or the access code 101XXXX to the customer with the Initial Address Message (IAM). CIP is available with originating FGD in suitably equipped end offices and access tandems. CIP will be populated by a 4-digit CIC at the rates shown in 6.6. Application of the charges is in 6.5.12.

The Telephone Company will make every effort to maintain the CIP information, equipment and facilities in a format which facilitates the customer's use of the CIP offering. Changes (i.e., technology, customer account makeup, etc.) can occur affecting such information, however, and the Telephone Company cannot guarantee that the CIP equipment and facilities will be completely capable of processing CIP data at all times. Accordingly, the Telephone Company shall not be liable for any incidental, indirect, special or consequential damages (including lost revenue or profits) of any kind, resulting from inaccuracy of CIP data and/or the inability of its equipment and facilities to process CIP data.

TARIFF BRANCH
RECEIVED
7/17/2006
PUBLIC SERVICE
COMMISSION
OF KENTUCKY

ISSUED: JULY 17, 2006
BY: Vice President
Lexington, Kentucky

EFFECTIVE: AUGUST 1, 2006

ACCESS SERVICE

6. Switched Access Service (Cont'd)

6.3 Optional Features (Cont'd)

6.3.3 Transport Termination Optional Features

(A) Rotary Dial Station Signaling

This option provides for the transmission of called party address signaling from rotary dial stations to the customer's premises for originating calls. This option is provided in the form of a specific type of Transport Termination. It is available with FGB only on a directly trunked basis.

(B) Operator Trunk - Coin, Non-Coin, or Combined Coin and Non-Coin

This option may be ordered to provide coin, non-coin, or combined coin and non-coin operation. It is available, only with Feature Group C and is provided in electronic end offices and other Telephone Company end offices where equipment is available. It is provided as a trunk type of Transport Termination.

Coin:
This arrangement provides for initial coin return control and routing of 0+, 0-, 1+, 01+ or 011+ prefixed originating coin calls requiring operator assistance to the customer's premises. Because operator assisted coin calling traffic is routed over a trunk group dedicated to operator assisted calls, this arrangement is only provided in association with the Service Class Routing option.

The operator assistance coin calling arrangement is also normally ordered by the customer in conjunction with the ANI optional feature, since the preponderance of trunk groups equipped with this arrangement will be terminated in the customer's TSPS or TSPS-like systems, rather than in the customer's manual cord boards.

TARIFF BRANCH
RECEIVED
7/17/2006
PUBLIC SERVICE
COMMISSION
OF KENTUCKY

ISSUED: JULY 17, 2006
BY: Vice President
Lexington, Kentucky

EFFECTIVE: AUGUST 1, 2006

ACCESS SERVICE

6. Switched Access Service (Cont'd)

6.3 Optional Features (Cont'd)

6.3.3 Transport Termination Optional Features (Cont'd)

(B) Operator Trunk - Coin, Non-Coin, or Combined Coin and Non-Coin (Cont'd)

Non-Coin:
This arrangement provides for the routing of 0+, 0-, 1+, 01+ or 011+ prefixed originating non-coin calls requiring operator assistance to the customer's premises. Because operator assisted non-coin calling traffic is routed over a trunk group dedicated to operator assisted calls, this arrangement is only provided in association with the Service Class Routing option.

The operator assistance non-coin calling arrangement is also normally ordered by the customer in conjunction with the ANI optional feature, since the preponderance of trunk groups equipped with this arrangement will be terminated in the customer's TSPS systems, rather than in the customer's manual cord boards. When so equipped, the ANI feature provides for the forwarding of information digits which identify that the call has originated from a hotel or motel, and when room number identification is required, or that special screening is required, e.g., for coinless public stations, dormitory or inmate stations, or other screening arrangements agreed to between the customer and the Telephone Company.

Combined Coin and Non-Coin:
This arrangement provides for initial coin return control and routing of 0+, 0-, 1+ or 011+ prefixed originating operator assisted coin and non-coin calls requiring operator assistance to the customer's premises. Because operator assisted coin and non-coin calling traffic is routed over a trunk group dedicated to operator assisted calls, this arrangement is only provided in association with the Service Class Routing option.

TARIFF BRANCH
RECEIVED
7/17/2006
PUBLIC SERVICE
COMMISSION
OF KENTUCKY

ISSUED: JULY 17, 2006
BY: Vice President
Lexington, Kentucky

EFFECTIVE: AUGUST 1, 2006

ACCESS SERVICE

6. Switched Access Service (Cont'd)

6.3 Optional Features (Cont'd)

6.3.3 Transport Termination Optional Features (Cont'd)

(B) Operator Trunk - Coin, Non-Coin, or Combined Coin and Non-Coin (Cont'd)

This arrangement is normally ordered by the customer in conjunction with the ANI optional feature, since the preponderance of trunk groups equipped with this arrangement will be terminated in the customer's operator services systems rather than in the customer's manual cord boards. When so equipped, the ANI optional feature provides for the forwarding of information digits which identify that the call has originated from a hotel or motel, and whether room number identification is required, or that special screening is required, e.g., for coinless public stations, dormitory or inmate stations, or other screening arrangements agreed to between the customer and the Telephone Company.

(C) Operator Trunk - Full Feature

This option provides the initial coin return control function to the customer's operator. It is available with FGD and is provided as a trunk type for Transport Termination. This option is not available in conjunction with SS7 Out of Band Signaling.

TARIFF BRANCH
RECEIVED
7/17/2006
PUBLIC SERVICE
COMMISSION
OF KENTUCKY

ISSUED: JULY 17, 2006
BY: Vice President
Lexington, Kentucky

EFFECTIVE: AUGUST 1, 2006

ACCESS SERVICE

6. Switched Access Service (Cont'd)

6.4 Provision of Switched Access Service

In addition to the obligations of the Telephone Company set forth in 2, preceding, the Telephone Company has certain other obligations pertaining only to the provision of Switched Access Service. These obligations are as follows:

(A) Network Management

The Telephone Company will administer its network to insure the provision of acceptable service levels to all telecommunications users of the Telephone Company's network services. Generally, service levels are considered acceptable only when both end users and customers are able to establish connection with little or no delay encountered within the Telephone Company network.

The Telephone Company maintains the right to apply protective controls, (i.e., those actions which selectively cancel the completion of traffic) over any traffic carrier over its network, including that associated with a customer's Switched Access Service. Generally, such protective measures would only be taken as a result of occurrences such as failure or overload of Telephone Company or customer facilities, natural disasters, mass calling or national security demands. In the event that the protective controls applied by the Telephone Company result in the complete loss of service by the customer, the customer will be granted a Credit Allowance for Service Interruption as set forth in 2.4.4(C) preceding.

(B) Design and Traffic Routing of Switched Access Service

The Telephone Company shall work cooperatively with the customer to design and determine the routing and directionality of Switched Access Service including the selection of the first point of switching and the selection of facilities from the first point of switching to the customer's premises.

TARIFF BRANCH
RECEIVED
7/17/2006
PUBLIC SERVICE
COMMISSION
OF KENTUCKY

ISSUED: JULY 17, 2006
BY: Vice President
Lexington, Kentucky

EFFECTIVE: AUGUST 1, 2006

ACCESS SERVICE

6. Switched Access Service (Cont'd)

6.4 Provision of Switched Access Service (Cont'd)

(B) Design and Traffic Routing of Switched Access Service (Cont'd)

Selection of facilities, equipment and routing of Switched Access is based on standard engineering methods, available facilities and equipment, Telephone Company traffic routing plans and the customer's order for service.

The Telephone Company will select the First Point(s) of Switching and routing to be used where traffic is aggregated at a central location. Direct-Trunked Transport is not provided to centralized equal access end offices and is not provided to those Telephone Company End Offices that are not capable of measuring Switched Access Minutes of Use.

Any customer may request that the facilities used to provide Switched Access Service be specially routed. The regulations, rates and charges for Special Facilities Routing (i.e., Avoidance, Diversity, and Cable-Only) are set forth in 11 following.

(C) Access Tandem Arrangements

Trunk side switched access services may be provided via a Telephone Company access tandem to specific end offices subtending that Telephone Company access tandem. Each subtending end office will be located within the Telephone Company Access Tandem Network as defined by the Telephone Company. Telephone Company access tandem offices are identified in the National Exchange Carrier Association Tariff FCC No. 4. The Telephone Company will provide the description of a Telephone Company Access Tandem Network to a customer upon request. When trunk side access is ordered to a specific Telephone Company access tandem, access will be provided to all the NXXs included in that Telephone Company Access Tandem Network.

TARIFF BRANCH
RECEIVED
7/17/2006
PUBLIC SERVICE
COMMISSION
OF KENTUCKY

ISSUED: JULY 17, 2006
BY: Vice President
Lexington, Kentucky

EFFECTIVE: AUGUST 1, 2006

ACCESS SERVICE

6. Switched Access Service (Cont'd)

6.4 Provision of Switched Access Service (Cont'd)

(D) Determination of Number of Transmission Paths and Terminations

For Switched Access Service arrangements the customer must specify the number and type of Entrance Facilities between the customer designated premises and the serving wire center in the order for service.

The Telephone Company will determine the number of Switched Access Service transmission paths to be provided for Tandem-Switched Transport Services, when in busy hour minutes of capacity. A transmission path is a communication path within the frequency bandwidth of approximately 300 to 3000 Hz or a derived communication path of frequency bandwidth of approximately 300 Hz to 3000 Hz provided over a high frequency analog facility or a high speed digital facility between a customer's premises and a Telephone Company location.

The number of transmission paths will be developed using the total busy hour minutes of capacity by type (as described in 5.1.2 (A)(2) preceding) for the end offices for each Switched Access Arrangement ordered from a customer's premises. The total busy hour minutes of capacity by type for the end office will be converted to transmission paths using standard Telephone Company traffic engineering methods. The number of transmission paths provided shall be the number required based on (1) the use of Telephone Company access tandem switches and end office switches, (2) the use of end office switches only, or (3) the use of Telephone Company access tandems only.

For analog entry switches, a termination will be provided for each transmission path provided. For digital entry switches, an equivalent termination will be provided for each transmission path provided.

(E) Transmission Specifications

Each Switched Access Service transmission path is provided with standard transmission specifications. There are three different standard specifications (Types A, B and C). The standard for a particular transmission path is dependent on the Switched Access Service, the Interface Group and whether the service is directly routed or via a Telephone Company access tandem.

TARIFF BRANCH
RECEIVED
7/17/2006
PUBLIC SERVICE
COMMISSION
OF KENTUCKY

ISSUED: JULY 17, 2006
BY: Vice President
Lexington, Kentucky

EFFECTIVE: AUGUST 1, 2006

ACCESS SERVICE

6. Switched Access Service (Cont'd)

6.4 Provision of Switched Access Service (Cont'd)

(E) Transmission Specifications (Cont'd)

The available transmission specifications are set forth in 9 following. Data Transmission Parameters are also provided with each Switched Access Service transmission path. The Telephone Company will, upon notification by the customer that the data parameters are not being met, conduct test independently or in cooperation with the customer, and take any necessary action to insure that the data parameters are met. The transmission performance parameters relate only to the Telephone Company provided portion of the service.

(F) Design Layout Report

At the request of the customer, the Telephone Company will provide to the customer the makeup of the facilities and services provided from the customer's premises to the first point of switching. This information will be provided in the form of a Design Layout Report. The Design Layout Reports will be provided to the customer at no charge, and will be reissued or updated whenever these facilities are materially changed.

(G) Testing

(1) Acceptance Testing

Prior to the customer's acceptance of Switched Access Service, and at the Customer's request, the Telephone Company will cooperatively test the following parameters as set forth in (a) and (b) following. Also, when a customer provides a digital to analog conversion in the provision of a Switched Access Service, the customer has the ability to specify either the digital or analog acceptance tests as described in (a) or (b) following to be performed by the Telephone Company. In addition to the various tests outlined below which will be included with the installation of service, other additional Cooperative Acceptance Testing and Nonscheduled Testing is available for Switched Access Service as detailed in 8. following.

When a customer orders FGB, FGC, FGD, 500 Access Service, 800/877/888 Access Service or 900 Access Service and the Telephone Company provides a digital transmission facility between the Telephone Company serving wire center and the customers designated premise without a digital to analog conversion; the digital acceptance tests performed by the Telephone Company will consist of the following:

TARIFF BRANCH
RECEIVED
7/17/2006
PUBLIC SERVICE
COMMISSION
OF KENTUCKY

ISSUED: JULY 17, 2006
BY: Vice President
Lexington, Kentucky

EFFECTIVE: AUGUST 1, 2006

ACCESS SERVICE

6. Switched Access Service (Cont'd)

6.4 Provision of Switched Access Service (Cont'd)

(G) Testing (Cont'd)

(1) Acceptance Testing (Cont'd)

(a) (Cont'd)

- Bit Error test in each transmission direction
- 1004 Hz test per trunk group per di-group in each transmission direction
- C-notched noise test per trunk group per di-group in each transmission direction
- One operational signaling test per trunk in each transmission direction.

If a Telephone Company digital facility is provided in conjunction with a High Capacity Special Access Service, the Telephone Company will furnish, upon the customer's request and where the central office is technically equipped, appropriate equipment to allow the customer to conduct tests to verify the integrity of the facility in lieu of cooperative acceptance testing.

(b) When a customer orders FGB, FGC, FGD, or 800/877/888 Switched Access Service, and the Telephone Company provides analog transmission facilities between the Telephone Company serving wire center and the customer's designated premise, the analog tests performed by the Telephone Company consist of the following:

- Attenuation tests
- Balance tests (ERL-SRL)
- C-Message noise test
- C-notched noise
- 3 tone slope
- DC continuity
- Operational Signaling

(c) When 500, 800, 877, 888 or 900 NXXs are activated (new translations installed) by the Telephone Company, NXX code testing will be performed by the Telephone Company. For each new NXX activated in a Telephone Company switch capable of performing the customer identification function for 500, 800, 877, 888 or 900 Access Service, the Telephone Company shall place one test call to the IC's 500, 800, 877, 888 or 900-NXX-XXXX test number. This number provides an announcement identifying the IC, thereby verifying Telephone Company routing.

TARIFF BRANCH
RECEIVED
7/17/2006
PUBLIC SERVICE
COMMISSION
OF KENTUCKY

ISSUED: JULY 17, 2006
BY: Vice President
Lexington, Kentucky

EFFECTIVE: AUGUST 1, 2006

ACCESS SERVICE

6. Switched Access Service (Cont'd)

6.4 Provision of Switched Access Service (Cont'd)

(G) Testing (Cont'd)

(2) In-Service Testing (Cont'd)

After a Switched Access Service has been tested and accepted by the customer for service, the Telephone Company may perform various tests to ensure the quality of the Switched Access Service. These tests may be performed on a routine basis at the discretion of the Telephone Company, and are made subject to the availability of qualified personnel and test equipment. No charge will be assessed to the customer for the provision of In-Service tests.

The Telephone Company may at its option provide the following types of In-Service Switched Access Service tests:

- Attenuation and noise tests
- Balance tests
- Gain - slope tests

When the Telephone Company and the customer agrees to test cooperatively, the Telephone Company shall provide the personnel and test equipment necessary to perform such tests at a mutually agreed upon time. The customer may request the Telephone Company to provide a technician at the customer's premises in order to perform these cooperatively scheduled tests. Rates and charges as set forth in 8.4 following will apply per technician provided.

(3) Testing Capabilities

FGA, FGB, FGC and FGD are provided, in the terminating direction where equipment is available, with Seven Digit Access to balance (100 type), and milliwatt (102 type) test lines.

Additionally, FGB, FGC and FGD are provided, in the terminating direction where equipment is available, with seven digit access to the following test lines:

- Nonsychronous or synchronous test lines
- Automatic transmission measuring (105 type) test line
- Data transmission (107 type) test line
- Loop around test line
- Short circuit and open circuit test line

TARIFF BRANCH
RECEIVED
7/17/2006
PUBLIC SERVICE
COMMISSION
OF KENTUCKY

ISSUED: JULY 17, 2006
BY: Vice President
Lexington, Kentucky

EFFECTIVE: AUGUST 1, 2006

ACCESS SERVICE

6. Switched Access Service (Cont'd)

6.4 Provision of Switched Access Service (Cont'd)

(G) Testing (Cont'd)

(4) SS7 Out of Band Signaling

When FGD, 500, 800, 877, 888 or 900 Access Service with SS7 Out of Band Signaling is ordered, network compatibility and other operational tests will be performed cooperatively by the Telephone Company and the customer at locations, dates, and times as specified by the Telephone Company in consultation with the customer. These tests are as specified in Bellcore Technical Reference Publication TR-TSV-000905. Successful completion is necessary to receive the SS7 signaling option. To protect the security of the SS7 network, certain of the information provided, i.e., point codes, by the Telephone Company to the customer will be subject to a nondisclosure agreement.

TARIFF BRANCH
RECEIVED
7/17/2006
PUBLIC SERVICE
COMMISSION
OF KENTUCKY

ISSUED: JULY 17, 2006
BY: Vice President
Lexington, Kentucky

EFFECTIVE: AUGUST 1, 2006

ACCESS SERVICE

6. Switched Access Service (Cont'd)

6.4 Provision of Switched Access Service (Cont'd)

(H) Trunk Group Measurement Reports

Subject to availability, the Telephone Company will made available trunk group data in the form of usage in CCS, peg count and overflow, to the customer based on previously agreed to intervals.

With the agreement of the customer, trunk group data in the form of usage in CCS, peg count and overflow for its end of all access trunk groups, where technologically feasible, will be made available to the Telephone Company. These data will be used to monitor trunk group utilization and service performance and will be based on previously arranged intervals and format.

(I) Service Performance Data

Subject to availability, end-to-end service performance data available to the Telephone Company through its own service evaluation routines, may also be made available to the customer based on previously arranged intervals and format. These data provides information on overall end-to-end call completion and non-completion performance, e.g., customer equipment blockage, failure results and transmission performance. These data do not include service performance data which are provided under other tariff sections; e.g., testing service results. If data are to be provided in other than paper format, the charges for such exchange will be determined on an individual case basis. Performance data related to customer provided facilities will not be provided.

(J) Equal Access Conversions

Rates and charges for Switched Access Service depend generally upon its use by the customer, and whether it is provided in a Telephone Company end office that is equipped to provide equal access capabilities (FGD Access described in 6.2.4). The Telephone Company will provide written notification to all access customers of record (at the minimum) within a particular LATA that an end office in that LATA is scheduled to be converted to an equal access end office. This notification will be sent, via certified U.S. Mail, to each access customer of record in the LATA where the conversion is scheduled to occur, at least six months in advance of the conversion date.

TARIFF BRANCH
RECEIVED
7/17/2006
PUBLIC SERVICE
COMMISSION
OF KENTUCKY

ISSUED: JULY 17, 2006
BY: Vice President
Lexington, Kentucky

EFFECTIVE: AUGUST 1, 2006

ACCESS SERVICE

6. Switched Access Service (Cont'd)

6.4 Provision of Switched Access Service (Cont'd)

(J) Equal Access Conversions (Cont'd)

ICs must comply with the FGD ordering procedures of the Telephone Company and a firm order for this service must be received no later than 120 days prior to the end office equal access conversion date in order for the IC to participate in the presubscription process as described in 8.5.

Customers may request FGD service to replace their existing Feature Group service subsequent to an office conversion to equal access. Rates and charges for such requests are set forth in 6.5.4(E).

(K) Design Blocking Probability

The Telephone Company will design the facilities used in the provision of Switched Access Service to meet the blocking probability criteria as set forth as follows:

For FGA and FGB no design blocking criteria apply.

For FGC the design blocking objective will be no greater than on percent (.01) between the point of termination at the customer's premises and the first point of switching when traffic is directly routed without an alternate route. Standard traffic engineering methods will be used by the Telephone Company to determine the number of transmission paths required to achieve this level of blocking.

For FGD the design blocking objective will be no greater than one percent (.01) between the point of termination at the customer's premises and the end office switch, whether the traffic is directly routed without an alternate route or routed via a Telephone Company access tandem. Standard traffic engineering methods as set forth in reference document Telecommunications Transmission Engineering - Volume 3 - Networks and Services (Chapters 6-7) will be used by the Telephone Company to determine the number of transmission paths required to achieve this level of blocking.

TARIFF BRANCH
RECEIVED
7/17/2006
PUBLIC SERVICE
COMMISSION
OF KENTUCKY

ISSUED: JULY 17, 2006
BY: Vice President
Lexington, Kentucky

EFFECTIVE: AUGUST 1, 2006

ACCESS SERVICE

6. Switched Access Service (Cont'd)

6.4 Provision of Switched Access Service (Cont'd)

(K) Design Blocking Probability (Cont'd)

For 800/877/888 Access Service provided via 500 Access Service trunk(s), 800/877/888 Access Service trunk(s), or 900 Access Service provided via 900 Access Service trunk(s) the design blocking objective will be no greater than on percent (.01) between the point of termination at the customer's premises and the first point of switching when traffic is directly routed without an alternate route. Standard traffic engineering methods will be used by the Telephone Company to determine the number of transmission paths required to achieve this level of blocking. During mass calling events, the blocking objective of no greater than one percent (.01) cannot be guaranteed.

The Telephone Company will perform routine measurement functions except on FGA and FGB to assure that an adequate number of transmission paths are in service. The Telephone Company will recommend that additional capacity (i.e., busy hour minutes of capacity or trunks) be ordered by the customer when additional paths are required to reduce the measured blocking to the designed blocking level. For the capacity ordered, the design blocking objective is assumed to have been met if the routine measurements show that the measured blocking does not exceed the threshold listed in the following tables.

(1) For transmission paths carrying only first routed traffic direct between an end office and customer's premises without an alternate route, and for paths carrying only overflow traffic, the measured blocking thresholds are as follows:

Number of Transmission Paths Per Trunk Group	Measured Blocking Thresholds in the Time Consistent Busy Hour for the Number of Measurements Taken Between 8:00 a.m. and 11:00 p.m. Per Trunk Group			
	15-20 Measurements	11-14 Measurements	7-10 Measurements	3-6 Measurements
2	.070	.080	.090	.140
3	.050	.060	.070	.090
4	.050	.060	.070	.080
5-6	.040	.050	.060	.070
7 or more	.030	.035	.040	.060

TARIFF BRANCH
RECEIVED
7/17/2006
PUBLIC SERVICE
COMMISSION
OF KENTUCKY

ISSUED: JULY 17, 2006
BY: Vice President
Lexington, Kentucky

EFFECTIVE: AUGUST 1, 2006

ACCESS SERVICE

6. Switched Access Service (Cont'd)

6.4 Provision of Switched Access Service (Cont'd)

(K) Design Blocking Probability (Cont'd)

(2) For transmission paths carrying first routed traffic between an end office and customer's premises via a Telephone Company access tandem, the measured blocking thresholds are as follows:

Number of Transmission Paths Per Trunk Group	Measured Blocking Thresholds in the Time Consistent Busy Hour for the Number of Measurements Taken Between 8:00 a.m. and 11:00 p.m. Per Trunk Group			
	15-20 Measurements	11-14 Measurements	7-10 Measurements	3-6 Measurements
2	.045	.055	.060	.095
3	.035	.040	.045	.060
4	.035	.040	.045	.055
5-6	.025	.035	.040	.045
7 or more	.020	.025	.030	.040

TARIFF BRANCH
RECEIVED
7/17/2006
PUBLIC SERVICE
COMMISSION
OF KENTUCKY

ISSUED: JULY 17, 2006
BY: Vice President
Lexington, Kentucky

EFFECTIVE: AUGUST 1, 2006

ACCESS SERVICE

6. Switched Access Service (Cont'd)

6.5 Rate Categories, Applications, and Regulations

6.5.1 Rate Categories

Switched Access Services is composed of four general Rate Categories which are combined to form the foundation for measuring and rating such services. Each Rate Category is composed of certain specific rate elements which may apply to each Switched Access Service. The specific rate elements which comprise each Rate Category are as follows.

Local Transport (Described in 6.5.2 following)

- Entrance Facility
- Direct-Trunked Transport
- Tandem-Switched Transport
- Interconnection Rate
- Multiplexing

End Office (Described in 6.5.3 following)

- Local Switching
- Information Surcharge
- 800/877/888 Data Base Query Service

Carrier Common Line (Described in Section 3 preceding)

- Originating Element
- Terminating Element

Nonrecurring Charge (Described in 6.5.4 following).

Local Transport, End Office and Carrier Common Line Charges are usage based rates applied on a per access minute basis, and are also applied as either premium rates or nonpremium rates as set forth in 6.5.6 following. Access minute charges are accumulated over a monthly period. The determination of access minutes is set forth in 6.5.5 following. 800/877/888 Data Base Query charges are applied on a per query basis either as basic or premium as described in 6.5.3(C).

TARIFF BRANCH
RECEIVED
7/17/2006
PUBLIC SERVICE
COMMISSION
OF KENTUCKY

ISSUED: JULY 17, 2006
BY: Vice President
Lexington, Kentucky

EFFECTIVE: AUGUST 1, 2006

ACCESS SERVICE

6. Switched Access Service (Cont'd)

6.5 Rate Categories, Applications, and Regulations (Cont'd)

6.5.2 Local Transport

(A) Local Transport Description

Local Transport provides the transmission of Switched Access communications between the customer's premises and the originating or terminating end office switch(es) in the Access Area with one exception. Local Transport associated with FGA 1+ terminating traffic provides for the transmission of Switched Access outside the Access Area, however within the LATA. Local Transport is comprised of the following rate elements; an Entrance Facility Rate, a Direct-Trunked Transport Rate, a Tandem-Switched Transport Rate and an Interconnection Rate.

Where Local Transport rates are applied on a distance sensitive basis, airline mileage is calculated in accordance with the V&H coordinate method as set forth in NECA Tariff FCC No. 4. If the calculated miles result in a fraction, the value is rounded up to the next full mile.

Local Transport is a two-way voice frequency transmission path composed of facilities and equipment determined by the Telephone Company. This transmission path permits the transport of calls in the originating direction (from the end user end office switch to the customer's premises) and in the terminating direction (from the customer's premises to the end office switch), but not simultaneously. This transmission path may be comprised of any form or configuration of plant and equipment capable of and typically used in the telecommunications industry for the transmission of voice and associated telephone signals within the frequency bandwidth of approximately 300 to 3000 Hz.

TARIFF BRANCH
RECEIVED
7/17/2006
PUBLIC SERVICE
COMMISSION
OF KENTUCKY

ISSUED: JULY 17, 2006
BY: Vice President
Lexington, Kentucky

EFFECTIVE: AUGUST 1, 2006

ACCESS SERVICE

6. Switched Access Service (Cont'd)

6.5 Rate Categories, Applications, and Regulations (Cont'd)

6.5.2 Local Transport (Cont'd)

(A) Local Transport Description (Cont'd)

The Telephone Company will work cooperatively with the customer in determining (1) whether the service is to be directly routed to an end office switch or through a Telephone Company access tandem switch, and (2) the directionality of service.

Switched Transport is provided at the rates and charges set forth in 6.6 following.

(B) Entrance Facility

The Entrance Facility Rate is assessed upon customers for the use of Telephone Company Voice Grade, DS1 and DS3 high capacity facilities, including interface arrangements, between the point of termination at the customer's premises and the Telephone Company's serving wire center. The Entrance Facility is a flat-rated charge assessed per Voice Grade, DS1 or DS3 termination provided at the customer's premises. This charge will apply even if the customer designated premises and the serving wire center are co-located in a Telephone Company building. Technical descriptions of each Entrance Facility and associated interface are further described in Section 9.1.

(C) Direct Trunked Transport

The Direct-Trunked Transport Rate is assessed upon customers for the use of Voicegrade, DS1 and DS3 high capacity transport dedicated to a customer between a serving wire center to an end office (including host end offices) when such facilities are not switched through a Telephone Company access tandem. Direct Trunked Transport also provides for the transmission facilities between:

- a serving wire center or end office and a Telephone Company Hub office other than the serving wire center where multiplexing is performed;

- a serving wire center and a Telephone Company access tandem for Tandem-Switched Transport services when Direct-Trunked Transport routing is desired directly to the Telephone Company access tandem,

The Direct-Trunked Transport Rate is flat-rated and has both distance-sensitive and nondistance-sensitive components. Direct-Trunked Transport is not provided to centralized equal access end offices and end offices not capable of measuring switched access usage. Centralized Access end offices and those offices not capable of measuring switched access usage are specified in NECA Tariff FCC No. 4.

TARIFF BRANCH
RECEIVED
7/17/2006
PUBLIC SERVICE
COMMISSION
OF KENTUCKY

ISSUED: JULY 17, 2006
BY: Vice President
Lexington, Kentucky

EFFECTIVE: AUGUST 1, 2006

ACCESS SERVICE

6. Switched Access Service (Cont'd)

6.5 Rate Categories, Applications, and Regulations (Cont'd)

6.5.2 Local Transport (Cont'd)

(C) Direct Trunked Transport (Cont'd)

The Direct-Trunked Transport Mileage rate is applied on a monthly airline mile basis.

To determine the Direct-Trunked Transport airline mileage, the distance will be measured from the wire center that serves the customer's premises to the Telephone Company access tandem, end office, WSO (for WATS and WATS-type), or the end office that serves as the host for a remote office.

For traffic originating from or terminating to a remote office, the mileage will be calculated separately from the end office switch that serves as the host to the remote using the V&H coordinates method. The Direct-Trunked Transport Mileage Rate applies from the customer's serving wire center to the end office that serves as the host office. Traffic originating from and/or terminating to the remote will be billed Tandem-Switched Transport charges, based on mileage between the host and remote office. The Tandem Switched Transport-Termination charge is applicable for each termination between the host and remote office. The Tandem-Switching Charge is not applicable for Tandem-Switched Transport between the end office that serves as the host to the remote office.

When Telephone Company Hubs are involved, mileage is computed and rates applied separately for each section of the Direct-Trunked Transport, i.e., customer serving wire center to Hub, Hub to Hub, Hub to Telephone Company access tandem or Hub to end office.

(2) The Direct-Trunked Transport - Fixed Rate is applied only once per facility. When two or more customer designated premises are served by a common serving wire center (i.e., mileage is zero) the fixed rate component is not applied. Except when served by a common serving wire center, the Fixed charge is applied in full whether the Telephone Company provides one or more than one mileage facility terminations. The Fixed rate does not apply when the Telephone Company provides only an intermediate portion of a mileage facility and no mileage facility terminations.

TARIFF BRANCH
RECEIVED
7/17/2006
PUBLIC SERVICE
COMMISSION
OF KENTUCKY

ISSUED: JULY 17, 2006
BY: Vice President
Lexington, Kentucky

EFFECTIVE: AUGUST 1, 2006

ACCESS SERVICE

6. Switched Access Service (Cont'd)

6.5 Rate Categories, Applications, and Regulations (Cont'd)

6.5.2 Local Transport (Cont'd)

(D) Tandem-Switched Transport

The Tandem-Switched Transport Rate is assessed upon customers for the use of transport between a serving wire center and an end office that is switched at a Telephone Company access tandem. The Tandem-Switched Transport Rate may also be assessed for transport between a Telephone Company access tandem and end office, when the customer orders Direct-Trunked Transport to a Telephone Company access tandem*, between a host end office and a remote end office and between a FGA dial tone office and other end offices in the local calling area. Tandem-Switched transport consists of circuits dedicated to the use of a single customer from the serving wire center to the Telephone Company access tandem and circuits used in common by multiple customers from the Telephone Company access tandem to an end office. The Tandem-Switched Transport Rate includes three subelements, a Tandem-Switched Transport - Facility, a Tandem-Switched Transport - Termination, and a Tandem Switching Rate. The Tandem-Switching Rate is not applicable for transport between a host end office and a remote end office or to FGA transport.

The Tandem-Switched Transport - Facility rate is applied per access minute per airline mile for each Switched Access Feature Group type. Tandem-Switched Transport-Facility airline mileage will be determined as follows:

Where Tandem-Switched Transport is ordered between a serving wire center and end offices subtending the Telephone Company access tandem, mileage will be measured from the serving wire center that serves the customer's premises to the end office or WSO (for WATS and WATS-type).

Where Direct-Trunked Transport is ordered between a serving wire center and a Telephone Company access tandem, and Tandem-Switched Transport is ordered to subtending end offices, mileage will be measured from the Telephone Company access tandem to the end office or WSO (for WATS and WATS-type)*.

For either of the above Tandem-Switched Transport configurations, when the end office is acting as a host office, a separate mileage calculation determines the mileage from the host office to the remote office. Traffic originating from and/or terminating to the remote will be billed Tandem-Switched Transport charges. The Tandem Switching charge does not apply to traffic between a host and remote office.

* Due to billing constraints, the ordering of Tandem-Switched Transport in conjunction with Direct-Trunked Transport is prohibited until the billing system can accommodate this service.

TARIFF BRANCH
RECEIVED
7/17/2006
PUBLIC SERVICE
COMMISSION
OF KENTUCKY

ISSUED: JULY 17, 2006
BY: Vice President
Lexington, Kentucky

EFFECTIVE: AUGUST 1, 2006

ACCESS SERVICE

6. Switched Access Service (Cont'd)

6.5 Rate Categories, Applications, and Regulations (Cont'd)

6.5.2 Local Transport (Cont'd)

(D) Tandem-Switched Transport (Cont'd)

(1) (Cont'd)

Transport rates apply to the switched access minutes of use that originate/terminate at a MTSO directly connected to a Telephone Company access tandem or end office. Where the connection is made directly to an end office, Switched Transport rates (Tandem-Switched Transport or Direct-Trunked Transport, as ordered by the customer) shall apply between the end office and the serving wire center of the customer. Where the connection is made directly to a Telephone Company access tandem, Switched Transport rates (Tandem-Switched Transport or Direct-Trunked Transport, as ordered by the customer) shall apply between the Telephone Company access tandem and the serving wire center of the customer. For Telephone Company access tandem connections, Tandem-Switched Transport Facility mileage, if applicable, will be measured from the access tandem to the customer's serving wire center.

Where Tandem-Switched Transport - Facility is provided by more than one telephone company, the mileage for each will be determined as in 2.7.

The Tandem-Switched Transport - Facility rate will not apply if the CDL serving wire center and the end office are collocated (where V/H - V/H = 0).

(2) The Tandem-Switched Transport - Termination rate applies per access minute for each termination (i.e., the first point of switching and the end office serving the end user) for all Switched Access Feature Group types. When both terminations are provided by the Telephone Company, the Tandem-Switched Transport - Termination rate applies twice, including those situations when the terminations are co-located.

When both terminations are provided by the Telephone Company and traffic originates from or terminates to a remote office, the Tandem-Switched Transport - Termination rate applies four times (i.e., for each termination from the serving wire center to the host and for each termination from the host to the remote office).

TARIFF BRANCH
RECEIVED
7/17/2006
PUBLIC SERVICE
COMMISSION
OF KENTUCKY

ISSUED: JULY 17, 2006
BY: Vice President
Lexington, Kentucky

EFFECTIVE: AUGUST 1, 2006

ACCESS SERVICE

6. Switched Access Service (Cont'd)

6.5 Rate Categories, Applications, and Regulations (Cont'd)

6.5.2 Local Transport (Cont'd)

(D) Tandem-Switched Transport (Cont'd)

(2) (Cont'd)

Where the Tandem-Switched Transport - Facility is provided by more than one telephone company, the Tandem-Switched Transport - Termination rate applies for the termination (i.e., the first point of switching or the end office serving the end user) at the Telephone Company end of the Switched Transport as in 2.7. The Tandem-Switched Transport - Termination rate will not apply when the Telephone Company is the intermediate provider of the Tandem-Switched Transport - Facility.

The Tandem Switching rate is usage-sensitive and is applied per access minute to all feature groups for Tandem-Switched Transport with two exceptions. The Tandem-Switching Rate is not applicable for Tandem-Switched Transport between a host office and a remote office, nor is it applicable for FGA including Extended FGA Terminating Traffic described in 6.5.9.

(E) Interconnection Rate

The Interconnection Rate is assessed upon all customers for interconnecting with the Telephone Company's switched access network.

The Interconnection rate is usage-sensitive and is applied per access minute to all feature groups that utilize the Telephone Company's switched access network. It applies to all originating and terminating minutes of use whether transported via Direct-Trunked Transport, Tandem-Switched Transport or Entrance Facilities.

TARIFF BRANCH
RECEIVED
7/17/2006
PUBLIC SERVICE
COMMISSION
OF KENTUCKY

ISSUED: JULY 17, 2006
BY: Vice President
Lexington, Kentucky

EFFECTIVE: AUGUST 1, 2006

ACCESS SERVICE

6. Switched Access Service (Cont'd)

6.5 Rate Categories, Applications, and Regulations (Cont'd)

6.5.2 Local Transport (Cont'd)

(F) Multiplexing

Multiplexing provides for arrangements to convert a single higher capacity or bandwidth circuit for bulk transport to several lower capacity or bandwidth circuits. Monthly rates and nonrecurring charges for multiplexing apply as follows: 1) the DS3/DS1 Multiplexing Charge applies to all DS3 to DS1 multiplexing arrangements; 2) the DS1/Voice Multiplexing Charge applies to all DS1 Entrance Facility and Direct-Trunked Transport circuits that terminate in an analog office and where the multiplexer performs DS1/Voice multiplexing functions; 3) a Multiplexing Charge will always apply on High Capacity shared use switched and special access facilities.

(G) (Reserved for Future Use)

(H) Mileage Measurement Exceptions

(1) The Telephone Company may reconfigure its local exchange plant as required in the normal operation of its business. If such network reconfiguration results in a changed location of the IC serving wire center the Telephone Company will provide the IC with a minimum 6 months notice. The Local Transport Mileage measurement will be based upon the new serving wire center's V & H coordinates and the end office switch V & H coordinates.

(2) For FGA, the Entrance Facility charge shall apply between the customer's premises and the customer's serving wire center. If the serving wire center is not the dial tone office, Direct-Trunked Transport shall apply between the serving wire center and the dial tone office. Tandem-Switched Transport (Facility and Termination) rates, excluding the Tandem Switching charge, shall apply between the dial tone office and the end office for FGA traffic that originates and/or terminates within the FGA Access Area.

For FGA calls terminated on an extended basis outside the FGA Access Area, but within the LATA, mileage in the terminating direction is also calculated on the airline distance between the FGA dial tone office and the end office switch where the call terminates as set forth in 6.5.9 (A) following.

TARIFF BRANCH
RECEIVED
7/17/2006
PUBLIC SERVICE
COMMISSION
OF KENTUCKY

ISSUED: JULY 17, 2006
BY: Vice President
Lexington, Kentucky

EFFECTIVE: AUGUST 1, 2006

ACCESS SERVICE

6. Switched Access Service (Cont'd)

6.5 Rate Categories, Applications, and Regulations (Cont'd)

6.5.2 Local Transport (Cont'd)

(H) Mileage Measurement Exceptions (Cont'd)

(3) When the Alternate Traffic Routing optional feature is provided with Feature Group C, D, 500 Access Service, 800/877/888 Access Service, 900 Access Service the Local Transport access minutes will be apportioned between the two trunk groups used to provide this feature. Such apportionment will be made using standard Telephone Company traffic engineering methodology and will be based on the last trunk CCS desired for the high usage group, as described in 6.3.2(N) preceding, and the total busy hour minutes of capacity ordered to the end office, when the feature is provided to an end office switch, or to the subtending end offices when the feature is provided at a Telephone Company access tandem. This appointment will serve as the basis for Local Transport mileage calculation. For Feature Group D, the apportionment will be based on the actual measured data which is recorded against the specific trunk group that carried a particular call.

(4) When terminating FGC Switched Access Service is provided from multiple customer premises to an end office not equipped with measurement capabilities, the total Local Transport access minutes for that end office will be apportioned among the trunk groups accessing the end office on the basis of the individual busy hour minutes of capacity ordered for each of those trunk groups. This apportionment will serve as the basis for Local Transport mileage calculation.

TARIFF BRANCH
RECEIVED
7/17/2006
PUBLIC SERVICE
COMMISSION
OF KENTUCKY

ISSUED: JULY 17, 2006
BY: Vice President
Lexington, Kentucky

EFFECTIVE: AUGUST 1, 2006

ACCESS SERVICE

6. Switched Access Service (Cont'd)

6.5 Rate Categories, Applications, and Regulations (Cont'd)

6.5.3 End Office

The End Office rate category provides the local end office switching and end user termination functions necessary to complete the transmission of Switched Access communications to and from the end users served by the local end office. The End Office Rate category includes the Local Switching and Information Surcharge rate elements.

(A) Local Switching

The Local Switching rate element provides for the use of end office switching equipment, the termination of end user common lines at the local end office, and the termination of calls at a Telephone Company intercept operator or recording. The intercept operator or recording tells a caller why a call could not be completed and, if possible, provides the correct number.

Where end offices are appropriately equipped, international dialing may be provided. International dialing provides the capability of switching international calls with service prefix and address codes having more digits than are capable of being switched through a standard FGC or FGD equipped end office.

Local Switching is available on a bundled or unbundled basis. Local Switching - Bundled (EOSB) rates apply to Switched Access services provided as Feature Groups. EOSB and EOSU rates are applied on a premium and a nonpremium basis as discussed in 6.5.6.

TARIFF BRANCH
RECEIVED
7/17/2006
PUBLIC SERVICE
COMMISSION
OF KENTUCKY

ISSUED: JULY 17, 2006
BY: Vice President
Lexington, Kentucky

EFFECTIVE: AUGUST 1, 2006

ACCESS SERVICE

6. Switched Access Service (Cont'd)

6.5 Rate Categories, Applications, and Regulations (Cont'd)

6.5.3 End Office (Cont'd)

(B) Information Surcharge

Information Surcharge rates are assessed to a customer based on the total number of access minutes. Information Surcharge rates are set forth in 6.6 following. The application of these rates with respect to individual Switched Access Arrangements is set forth in 6.5.6 following.

(C) 800/877/888 Data Base Query Service

Query usage charges for 800/877/888 Data Base Query Service shown in 6.2.5(D) apply as follows:

(1) A Basic 800/877/888 Data Base Query charge will apply for each basic 800/877/888 call query received at the Telephone Company's 800/877/ 888 data base. Per query charges are accumulated over a monthly period and billed to the customer on a monthly basis.

(2) A Premium 800/877/888 Data Base Query charge will apply for each premium 800/877/888 call query received at the Telephone Company's 800/877/888 data base. Per query charges are accumulated over a monthly period and billed to the customer on a monthly basis.

TARIFF BRANCH
RECEIVED
7/17/2006
PUBLIC SERVICE
COMMISSION
OF KENTUCKY

ISSUED: JULY 17, 2006
BY: Vice President
Lexington, Kentucky

EFFECTIVE: AUGUST 1, 2006

ACCESS SERVICE

6. Switched Access Service (Cont'd)

6.5 Rate Categories, Applications, and Regulations (Cont'd)

6.5.4 Nonrecurring Charges

Nonrecurring charges are one-time charges that apply for specific work activities in conjunction with providing switched access service or a change to an existing Switched Access Arrangement.

(A) Switched Access Installation and Ordering Charges

(1) Service Installation Charge

For Entrance Facilities, this charge applies to customer requests for installation of Switched Access Entrance Facilities from the customer premises to the serving wire center. The Service Installation Charge applies on a per Entrance Facility basis and is dependant upon the type of Entrance Facility ordered (i.e., Voice Grade, DS1 or DS3). Changes in the type of Entrance Facility will be treated as a discontinuance of one type of service and a start of another. The Service Installation Charge shall apply to the new Entrance Facility installation.

For multiplexing, this charge applies per multiplexing arrangement ordered and is dependent upon the type of multiplexing performed.

(2) Switched Access Ordering Charge

This charge, applied on a per ASR basis, is associated with the work performed by the Telephone Company in connection with the receiving, recording and processing of service requests. The Switched Access Ordering Charge applies to all requests to establish Entrance Facilities, Direct-Trunked Transport Facilities, and Tandem-Switched Transport Facilities. Where Entrance Faculties and Direct-Trunked and/or Tandem-Switched Transport are ordered on a single ASR, only one Switched Access Ordering Charge applies. This charge is in addition to any Service Installation Charge for Entrance Facility installations.

The Switched Access Ordering Charge also applies to requests to activate additional trunks or to increase BHMC on existing Switched Transport Facilities, changes in the type of Feature Group or Direct-Trunked Transport, and for any modifications or changes to existing services that are not considered an administrative change as described in 6.5.4(B).

Pursuant to the Federal Communications Commission's (FCC) Order in CC Docket No. 91-213, Transport Rate Structure and Pricing, released October 16, 1992, all nonrecurring charges (NRCs) for service connection are waived when a customer converts trunks from tandem-switched to direct-trunked or from direct-trunked to tandem-switched. NRCs are also waived if a customer orders the discontinuance of over provisioned trunks, or the conversion of existing Local Transport circuits from a lower capacity service to a higher capacity service or from a higher capacity service to a lower capacity service. Waiver of these NRCs will continue through June 30, 1995.

TARIFF BRANCH
RECEIVED
7/17/2006
PUBLIC SERVICE
COMMISSION
OF KENTUCKY

ISSUED: JULY 17, 2006
BY: Vice President
Lexington, Kentucky

EFFECTIVE: AUGUST 1, 2006

ACCESS SERVICE

6. Switched Access Service (Cont'd)

6.5 Rate Categories, Applications, and Regulations (Cont'd)

6.5.4 Nonrecurring Charges (Cont'd)

(B) Administrative Changes

Administrative changes will be made without charge(s) to the customer. Administrative changes are as follows:

- Change of customer name,
- Change of customer or customer's end user premises address when the change of address is not a result of a physical relocation of equipment,
- Change in billing date (name, address, or contact name or telephone number),
- Change of agency authorization,
- Change of customer circuit identification,
- Change of billing account number,
- Change of customer test line number,
- Change of customer or customer's end user contact name or telephone number, and
- Change of jurisdiction.

(C) Moves

A move involves a change in the physical location of one of the following:

- The point of termination at the customer's premises
- The customer's premises

The charges for the move are dependent on whether the move is to a new location within the same building or to a different building.

(1) Moves Within the Same Building

When the move is to a new location within the same building, the Company shall be responsible for the physical relocation of the Point of Termination and any associated Network Terminating Wire as outlined in applicable Company operating practices. The charge for the move will be the Switched Access Ordering Charge as set forth in (A)(1) preceding. There will be no change in the minimum period requirements.

TARIFF BRANCH
RECEIVED
7/17/2006
PUBLIC SERVICE
COMMISSION
OF KENTUCKY

ISSUED: JULY 17, 2006
BY: Vice President
Lexington, Kentucky

EFFECTIVE: AUGUST 1, 2006

ACCESS SERVICE

6. Switched Access Service (Cont'd)

6.5 Rate Categories, Applications, and Regulations (Cont'd)

6.5.4 Nonrecurring Charges (Cont'd)

(C) Moves (Cont'd)

(2) Moves to a Different Building

Moves to a different building will be treated as a discontinuance and start of service and the Company shall provide a physical Point of Termination and any necessary Network Terminating Wire located at the new building as outlined in applicable Company operating practices. All associated nonrecurring charges will apply per service. New minimum period requirements will be established for the new service. The customer will also remain responsible for satisfying all outstanding minimum period charges for the discontinued service.

(D) NXX Translation Nonrecurring Charge

The NXX Translation Nonrecurring Charge, as set forth in 6.6 following, shall apply to each 500 or 900 NXX code activated or deactivated in a Company switch capable of performing the customer identification function for 500 Access Service or 900 Access Service. The total nonrecurring charge per customer order shall be determined by multiplying the number of switches in which the Company must activate or deactivate the NXX code within the serving area specified by the customer's order times the appropriate nonrecurring charge. Separate nonrecurring charges apply to the activation or deactivation of the first NXX code contained in a customer's order and to the activation or deactivation of each additional NXX code contained in the same order. In addition, the Switched Access Ordering Charge, as set forth in 6.5.4(A)(2) preceding will apply per ASR submitted for the activation or deactivation of NXX codes.

TARIFF BRANCH
RECEIVED
7/17/2006
PUBLIC SERVICE
COMMISSION
OF KENTUCKY

ISSUED: JULY 17, 2006
BY: Vice President
Lexington, Kentucky

EFFECTIVE: AUGUST 1, 2006

ACCESS SERVICE

6. Switched Access Service (Cont'd)

6.5 Rate Categories, Applications, and Regulations (Cont'd)

6.5.4 Nonrecurring Charges (Cont'd)

(E) Change of Feature Group Type

Changes from one type of Feature Group to another will be treated as a discontinuance of one type of service and a start of another and new minimum period obligations will be established. Nonrecurring charges will apply, with one exception.

When a customer upgrades a FGA or FGB service to a FGD service, and when FGC is upgraded to FGD coincident with the availability of FGD in an end office the nonrecurring charge will not apply and minimum period obligations will not change if the following conditions are met:

(1) The same customer premises is maintained, and

(2) The customer submits a disconnect order for FGA or FGB within 30 days after the customer is notified by the Company as to the results of the final Presubscription allocation of end users to the customer. Further, the customer must request an effective date for the disconnect orders within 60 days after the Telephone Company has notified the customer of the results of the final Presubscription allocation.

(F) Signaling System 7 (SS7) Out of Band Signaling

(1) (Reserved for Future Use)

(2) The Switched Access Ordering Charge will apply for a change in FGD switched access and 800/877/888 Access signaling from multifrequency address signaling to SS7 Out of Band Signaling except as specified in 6.5.4(F)(1).

(3) The ASR Ordering Charge will not apply if Calling Party Number (CPN) Parameter, Carrier Selection Parameter (CSP), and/or Charge Number (CN) Parameter are ordered at the same time as SS7 Out of Band Signaling is ordered in conjunction with FGD. The ASR Ordering Charge will apply if these optional features are ordered subsequent to the provision of SS7 Out of Band Signaling.

TARIFF BRANCH
RECEIVED
7/17/2006
PUBLIC SERVICE
COMMISSION
OF KENTUCKY

ISSUED: JULY 17, 2006
BY: Vice President
Lexington, Kentucky

EFFECTIVE: AUGUST 1, 2006

ACCESS SERVICE

6. Switched Access Service (Cont'd)

6.5 Rate Categories, Applications, and Regulations (Cont'd)

6.5.5 Determination of Access Minutes

(A) Measurement and Determination of Access Minutes

Customer traffic to end offices will be measured (i.e., recorded) by the Telephone Company at end offices or Telephone Company access tandems. Originating and terminating calls will be measured by the Telephone Company, as set forth in (B) through (F) following to determine the basis for computing chargeable access minutes. The Customer's facilities shall provide the necessary on-hook, off-hook, answer and disconnect supervision.

For terminating calls over FGA, FGB, FGC, to 500, 800, 877, 888 or 900, and FGD, and for originating calls over FGA, FGB, FGD, and 500 Access Service, 800/877/888 Access Service or 900 Access Service from equal access offices, the measured minutes are the chargeable access minutes. For originating calls over FGC and 500 Access Service, 800/877/888 Access Service and 900 Access Service from non-equal access offices, chargeable originating access minutes are derived from recorded minutes as set forth in (D) following. When assumed minutes are used, the assumed minutes are the chargeable access minutes as set forth in (G) following. When mixed interstate and intrastate Switched Access Service is provided the percent of intrastate usage is determined as set forth in (H) following.

For FGB, FGC and FGD access minutes or fractions thereof, the exact value of the fraction being a function of the switch technology where the measurement is made, are accumulated over the billing period for each end office, and are then rounded up to the nearest access minute for each end office.

For FGA access minutes or fractions thereof, the exact value of the fraction being a function of the switch technology where the measurement is made, are accumulated over the billing period of each line or hunt group, and are then rounded up to the nearest access minute for each line or hunt group.

TARIFF BRANCH
RECEIVED
7/17/2006
PUBLIC SERVICE
COMMISSION
OF KENTUCKY

ISSUED: JULY 17, 2006
BY: Vice President
Lexington, Kentucky

EFFECTIVE: AUGUST 1, 2006

ACCESS SERVICE

6. Switched Access Service (Cont'd)

6.5 Rate Categories, Applications, and Regulations (Cont'd)

6.5.5 Determination of Access Minutes (Cont'd)

(B) Feature Group A Usage Measurement

For originating calls over FGA, usage measurement begins upon acknowledgment from the customer.

The measurement of originating call usage over FGA ends when the originating FGA entry switch receives an on-hook supervisory signal from either the originating end user's end office, indicating the originating end user has disconnected, or the customer's point of termination, which ever is recognized first by the entry switch.

For terminating calls over FGA, usage measurement begins when the terminating FGA entry switch receives an off-hook supervisory signal from the terminating end user's end office, indicating the terminating end user has answered.

The measurement of terminating call usage over FGA ends when the terminating FGA entry switch receives an on-hook supervisory signal from either the terminating end user's end office, indicating the terminating end user has disconnected, or the customer's point of termination, whichever is recognized first by the entry switch.

(C) Feature Group B Usage Measurement

For originating calls over FGB, usage measurement begins when the originating FGB entry switch receives answer supervision forwarded from the customer's point of termination, indicating the customer's equipment has answered.

TARIFF BRANCH
RECEIVED
7/17/2006
PUBLIC SERVICE
COMMISSION
OF KENTUCKY

ISSUED: JULY 17, 2006
BY: Vice President
Lexington, Kentucky

EFFECTIVE: AUGUST 1, 2006

ACCESS SERVICE

6. Switched Access Service (Cont'd)

6.5 Rate Categories, Applications, and Regulations (Cont'd)

6.5.5 Determination of Access Minutes (Cont'd)

(C) Feature Group B Usage Measurement (Cont'd)

The measurement of originating call usage over FGB ends when the originating FGB entry switch receives disconnect supervision from either the originating end user's end office, indicating the originating end user has disconnected, or the customer's point of termination, whichever is recognized first by the entry switch.

The terminating calls over FGB, usage measurement begins when the terminating FGB entry switch receives answer supervision from the terminating end user's end office, indicating the terminating end user has answered.

The measurement of terminating call usage over FGB ends when the terminating FGB entry switch receives disconnect supervision from either the terminating end user's end office, indicating the terminating end user has disconnected, or the customer's point of termination, which ever is recognized first by the entry switch.

(D) Feature Group C Usage Measurement

For originating calls over FGC, usage measurement begins when the originating FGC entry switch receives answer supervision from the customer's point of termination, indicating the called party has answered.

The measurement of originating call usage over FGC ends when the originating FGC entry switch receives disconnect supervision from either the originating end user's end office, indicating the originating end user has disconnected, or the customer's point of termination, whichever is recognized first by the entry switch.

For originating calls over FGC, chargeable access minutes are calculated as follows:

Step 1: Obtain recorded originating minutes and messages [measured as set forth in (C) following] from the appropriate recording data.

TARIFF BRANCH
RECEIVED
7/17/2006
PUBLIC SERVICE
COMMISSION
OF KENTUCKY

ISSUED: JULY 17, 2006
BY: Vice President
Lexington, Kentucky

EFFECTIVE: AUGUST 1, 2006

ACCESS SERVICE

6. Switched Access Service (Cont'd)

6.5 Rate Categories, Applications, and Regulations (Cont'd)

6.5.5 Determination of Access Minutes (Cont'd)

(D) Feature Group C Usage Measurement (Cont'd)

Step 2: Obtain the total attempts by dividing the originating measured messages by the completion ratio. Completion ratios (CR) are obtained separately for the major call categories such as DDD, operator, 500, 800, 877, 888, 900, directory assistance and international from a sample study which analyzes the ultimate completion status of the total attempts which receive acknowledgment from the customer. That is, Measured Messages divided by Completion Ratio equals Total Attempts.

Step 3: Obtain the total non-conversation time additive (NCTA) by multiplying the total attempts (obtained in Step 2) by the NCTA per attempt ratio. The NCTA per attempt ratio is obtained from the sample study identified in Step 2 measuring the non-conversation time associated with both completed and incompleted attempts. The total NCTA is the time on a completed attempt from customer acknowledgment of receipt of call to called party answer (set up and ringing) plus the time on an incompleted attempt from customer acknowledgment of call until the Telephone Company access tandem or end office receives a disconnect signal (ring - no answer, busy or network blockage). That is, Total Attempts times Non-Conversation Time per Attempt Ratio equals Total NCTA.

Step 4: Obtain total chargeable originating access minutes by adding the total NCTA (obtained in Step 3) to the recorded originating measured minutes (obtained in Step 1). That is, Measured Minutes plus NCTA equals Chargeable Originating Access Minutes.

TARIFF BRANCH
RECEIVED
7/17/2006
PUBLIC SERVICE
COMMISSION
OF KENTUCKY

ISSUED: JULY 17, 2006
BY: Vice President
Lexington, Kentucky

EFFECTIVE: AUGUST 1, 2006

ACCESS SERVICE

6. Switched Access Service (Cont'd)

6.5 Rate Categories, Applications, and Regulations (Cont'd)

6.5.5 Determination of Access Minutes (Cont'd)

(D) Feature Group C Usage Measurement (Cont'd)

Following is an example which illustrates how the chargeable originating access minutes are derived from the measured originating minutes using this formula.

Where: Measured Minutes (M. Min.) = 7,000
Measured Messages (M. Mes.) = 1,000
Completion Ratio (CR) = .75
NCTA per Attempt = .4

(1) Total Attempts = $\frac{1{,}000(\text{M Mes})}{.75\ (\text{CR})}$ = 1,333.33

(2) Total NCTA = .4 (NCTA per Attempt) x 1,333.33 = 533.33

(3) Total Chargeable Originating Access Minutes =
7,000 (M. Min) + 533.33 (NCTA) = 7,533.33

For terminating calls over FGC to services other than 500, 800, 877, 888, 900 or Directory Assistance, terminating FGC usage is not directly measured at the terminating entry switch, but is imputed from the originating service usage, excluding usage from calls to 500, 800, 877, 888, 900 or Directory Assistance Services.

For terminating calls over FGC to 500, 800, 877, 888 or 900 Service, usage measurement begins when the terminating FGC entry switch receives answer supervision from the terminating end user's end office, indicating the terminating 800, 877, 888 or 900 Service end user has answered.

The measurement of terminating call usage over FGC to 500, 800, 877, 888 or 900 Service ends when the terminating FGC entry switch receives an off-hook supervisory signal from the terminating end user's end office, indicating the terminating 500, 800, 877, 888 or 900 Service end user has disconnected, or from the customer's point of termination, whichever is recognized first by the entry switch.

TARIFF BRANCH
RECEIVED
7/17/2006
PUBLIC SERVICE
COMMISSION
OF KENTUCKY

ISSUED: JULY 17, 2006
BY: Vice President
Lexington, Kentucky

EFFECTIVE: AUGUST 1, 2006

ACCESS SERVICE

6. Switched Access Service (Cont'd)

6.5 Rate Categories, Applications, and Regulations (Cont'd)

6.5.5 Determination of Access Minutes (Cont'd)

(E) Feature Group D Usage Measurement

For originating calls over FGD with multifrequency (MF) signaling, usage measurement begins when the originating FGD entry switch receives the first wink supervisory signal forwarded from the customer's point of termination.

For originating calls over FGD with SS7 Out of Band Signaling, usage measurement for direct trunks begins when the FGD first point of switching sends an Initial Address Message. Usage measurement for tandem trunks begins when the FGD first point of switching receives an Exit Message.

The measurement of originating call usage over FGD with MF signaling, ends when the originating FGD entry switch receives disconnect supervision from either the originating end user's office, indicating the originating end user has disconnected, or the customer's point of termination, whichever is recognized first by the entry switch.

The measurement of originating call usage over FGD with SS7 Out of Band Signaling ends when a Release Message is sent or received by the originating end user's end office, whichever occurs first.

For terminating calls over FGD with MF signaling, or FGD with SS7 Out of Band Signaling, usage measurement begins when the terminating FGD entry switch receives answer supervision from the terminating end user's end office, indicating the terminating end user has answered.

The measurement of terminating call usage over FGD with MF signaling, ends when the terminating FGD entry switch receives disconnect supervision from either the terminating end user's end office, indicating the terminating end user has disconnected, or the customer's point of termination, whichever is recognized first by the entry switch.

The measurement of terminating call usage over FGD with SS7 Out of Band Signaling ends when the FGD first point of switching receives or sends a Release Message, whichever occurs first.

TARIFF BRANCH
RECEIVED
7/17/2006
PUBLIC SERVICE
COMMISSION
OF KENTUCKY

ISSUED: JULY 17, 2006
BY: Vice President
Lexington, Kentucky

EFFECTIVE: AUGUST 1, 2006

ACCESS SERVICE

6. Switched Access Service (Cont'd)

6.5 Rate Categories, Applications, and Regulations (Cont'd)

6.5.5 Determination of Access Minutes (Cont'd)

(E) FGD Switched Access Service (Cont'd)

(1) With 950- XXXX

When a customer orders FGD Switched Access Service with 950-XXXX Access, as described in 6.3.2(AB), to be included with the installation of new FGD switched access facilities, appropriate Switched Access Installation Charges and ASR Ordering Charges will apply for the installation of the new FGD switched access facilities.

When a customer orders FGD Switched Access Service with 950-XXXX Access to be added to an existing FGD switched access service, only the ASR Ordering Charge and the Design Change Charge will apply for the addition of this optional end office service arrangement.

TARIFF BRANCH
RECEIVED
7/17/2006
PUBLIC SERVICE
COMMISSION
OF KENTUCKY

ISSUED: JULY 17, 2006
BY: Vice President
Lexington, Kentucky

EFFECTIVE: AUGUST 1, 2006

ACCESS SERVICE

6. Switched Access Service (Cont'd)

6.5 Rate Categories, Applications, and Regulations (Cont'd)

6.5.5 Determination of Access Minutes (Cont'd)

(F) 500, 800, 877, 888 and 900 Access Service Usage Measurement

For originating calls over 500, 800, 877, 888 and 900 Access Service with MF Signaling, usage measurement begins when the originating 500, 800, 877, 888 or 900 Access Service entry switch receives answer supervision from the customer's point of termination, indicating the called party has answered.

For originating calls over 500, 800, 877, 888 and 900 Access Service using SS7 Out of Band Signaling, usage measurement for direct trunks begins when the first point of switching sends an Initial Address Message. Usage measurement for tandem trunks begins when the first point of switching receives an Exit Message.

The measurement of originating call usage over 500, 800, 877, 888 and 900 Access Service with MF Signaling, ends when the originating 500, 800, 877, 888 or 900 Access Service entry switch receives disconnect supervision from either the originating end user's end office, indicating the originating end user has disconnected, or the customer's point of termination, whichever is recognized first by the entry switch.

The measurement of originating call usage over 500, 800, 877, 888 and 900 Access Service with SS7 Out of Band Signaling ends when a Release Message is sent or received by the originating end user's end office, whichever occurs first.

(G) Assumed Minutes of Use

Assumed minutes are used where measurement capability does not exist for FGA or FGB services and are applied on a per line or per trunk basis, as appropriate. The application of assumed minutes of use for FGA and FGB is set forth in (1) and (2) following.

(1) Where originating and terminating measurement capability does not exist for a FGA service arranged for two way calling, the number of assumed access minutes as set forth under the "2-Way" total in 6.6 following will apply per line. Where measurement capability exists for either originating or terminating usage, but not both, on a line arranged for two way calling, the number of access minutes per line will be the number of assumed access minutes as set forth under the "2-Way" total in 6.6 following or the measured usage, whichever is greater.

TARIFF BRANCH
RECEIVED
7/17/2006
PUBLIC SERVICE
COMMISSION
OF KENTUCKY

ISSUED: JULY 17, 2006
BY: Vice President
Lexington, Kentucky

EFFECTIVE: AUGUST 1, 2006

ACCESS SERVICE

6. Switched Access Service (Cont'd)

6.5 Rate Categories, Applications, and Regulations (Cont'd)

6.5.5 Determination of Access Minutes (Cont'd)

(G) Assumed Minutes of Use (Cont'd)

(1) (Cont'd)

Where a FGA service is arranged for either originating calling only or terminating calling only, the number of assumed access minutes as set forth under "Originating or Terminating" in 6.6 following, as appropriate, will apply per line.

Where measurement capability does not exist for FGA service, the originating and/or terminating CCL rate as set forth in Section 3.7 will be applied based on the directionality of the line, (i.e., originating or terminating). For lines arranged for two-way calling, other than those arranged for foreign exchange service, 53% of the "two-way" surrogate will be used to apply the originating CCL rate and 47% of the "two-way" surrogate will be used to apply the terminating CCL rate. For FGA service arranged to provide a foreign exchange service, the terminating CCL rate shall apply to all originating and terminating assumed minutes of use.

TARIFF BRANCH
RECEIVED
7/17/2006
PUBLIC SERVICE
COMMISSION
OF KENTUCKY

ISSUED: JULY 17, 2006
BY: Vice President
Lexington, Kentucky

EFFECTIVE: AUGUST 1, 2006

ACCESS SERVICE

6. Switched Access Service (Cont'd)

6.5 Rate Categories, Applications, and Regulations (Cont'd)

6.5.5 Determination of Access Minutes (Cont'd)

(G) Assumed Minutes of Use (Cont'd)

(2) Where originating and terminating measurement capability does not exist for FGB service provided to an end office switch or Telephone Company access tandem, the number of access minutes will be the "2-Way" assumed minutes of use as set forth in 6.6 following, per trunk per month when the trunk is arranged for two way calling. Where measurement capability exists for either originating or terminating usage, but not both, on a trunk arranged for two way calling, the number of access minutes per trunk per month will be the "2-Way" assumed minutes of use or the measured usage whichever is greater.

Where a FGB service is arranged for either originating calling only or terminating calling only, the "Originating Only," or, "Terminating Only" assumed minutes of use, as set forth in 6.6 following, will apply per trunk per month for trunks arranged for originating calling only or terminating calling only.

Where originating or terminating measurement capability does not exist for FGB service provided to a Telephone Company access tandem, the number of assumed access minutes will be allocated to each subtending end office for the purposes of applying Local Transport charges. This usage allocation will be based on the ratio of the number of subscriber lines in each end office to the total number of subscriber lines in the FGB Access Area.

(H) Jurisdictional Determination

When mixed interstate and intrastate Switched Access Service is provided, all charges (i.e., non-recurring, monthly, and/or usage), will be pro-rated between interstate, intrastate interLATA and intrastate intraLATA jurisdictions as set forth in (1) following. The customer shall provide, in its order for service, the projected percentage of interstate, intrastate interLATA and intrastate intraLATA usage for Switched Access Services as set forth in (1), (2) and (3) following.

TARIFF BRANCH
RECEIVED
7/17/2006
PUBLIC SERVICE
COMMISSION
OF KENTUCKY

ISSUED: JULY 17, 2006
BY: Vice President
Lexington, Kentucky

EFFECTIVE: AUGUST 1, 2006

ACCESS SERVICE

6. Switched Access Service (Cont'd)

6.5 Rate Categories, Applications, and Regulations (Cont'd)

6.5.5 Determination of Access Minutes (Cont'd)

(H) Jurisdictional Determination (Cont'd)

The percentage of an Access Service to be charged as Intrastate interLATA is applied in the following manner:

For monthly and non-recurring chargeable rate elements, multiply the percentage intrastate interLATA use times the quantity of each chargeable element times the stated tariff rate per element.

For usage sensitive (i.e., access minutes and calls) chargeable rate elements, multiply the percentage intrastate interLATA use times actual use (i.e., measured or Company assumed average use) times the stated tariff rate.

The percentage of an Access Service to be charged as Intrastate intraLATA is applied in the following manner:

For monthly and non-recurring chargeable rate elements, multiply the percentage intrastate intraLATA use times the quantity of each chargeable element times the stated tariff rate per element.

For usage sensitive (i.e., access minutes and calls) chargeable rate elements, multiply the percentage intrastate intraLATA use times actual use (i.e., measured or Company assumed average use) times the stated tariff rate.

For purposes of determining the jurisdiction of Switched Access traffic, once the Switched Access service is activated, the following criteria will apply:

(1) When the Telephone Company has measurement capability to provide the data to determine the jurisdiction of Switched Access traffic, the Telephone Company will determine the jurisdiction of Switched Access traffic. In those instances where the Telephone Company cannot determine the jurisdiction, the customer will be required to provide this information as described following.

(2) To determine the jurisdiction of FGA and FGB Switched Access traffic and that traffic placed on a 1+ basis in conjunction with FGA, the following criteria will apply:

(a) Traffic that enters a customer's network at a point within the same state as that in which the station designated by dialing is situated will be considered as intrastate.

(b) Traffic that enters a customer's network at a point in a state other than that in which the station designated by dialing is situated will be considered interstate.

TARIFF BRANCH
RECEIVED
7/17/2006
PUBLIC SERVICE
COMMISSION
OF KENTUCKY

ISSUED: JULY 17, 2006
BY: Vice President
Lexington, Kentucky

EFFECTIVE: AUGUST 1, 2006

ACCESS SERVICE

6. Switched Access Service (Cont'd)

6.5 Rate Categories, Applications, and Regulations (Cont'd)

6.5.5 Determination of Access Minutes (Cont'd)

(H) Jurisdictional Determination (Cont'd)

(3) When a customer submits an order for Switched Access services the customer must state the Percentage of Interstate Usage (PIU) on a statewide, LATA, billing account number (BAN) or end office level as follows:

(a) For FGA, FGB, FGC, FGD, 500, 800, 877, 888 and 900 End Office services, the PIU will be applied to the appropriate Carrier Common Line, End Office Switching, Information Surcharge, Interconnection Charge, and, if applicable, Tandem Switched Transport and Tandem Switching minutes of use.

(b) A PIU shall be provided for each Entrance Facility and a separate PIU shall be provided for each Direct Trunked Transport facility reflecting the originating and terminating traffic of all Switched Access services that use such facilities. When a customer orders the same type of Entrance Facility and Direct-Trunked Transport, i.e., DS0, DS1 or DS3, from the CDL to the first point of switching or Telephone Company hub, the customer may submit one PIU to be applied to both the Entrance Facility and the Direct-Trunked Transport. A consolidated PIU for all Entrance Facility and Direct Trunked Transport elements may be provided at the option of the customer if such PIU is representative of the actual interstate use of the service.

(4) The customer will provide quarterly reports indicating the percent of total Switched Access usage that is interstate and intrastate. The reports may aggregate usage at a statewide, LATA, BAN (Billing Account Number) or end office level.

The reports will be based on the calendar year and will be due within fifteen days after the end of the quarter beginning with the completion of the first full quarter of service.

The customer will maintain records of call detail from which the jurisdictional determination is made. For verification purposes the Telephone Company may request that these records be made available for inspection and audit on not more than an annual basis. Such audit may be conducted by independent auditors if the Telephone Company and the customer, or the customer alone is willing to pay the expense.

The quarterly reports will be used as the basis for prorating charges to the interstate and intrastate jurisdictions for the next three month's billing and will be effective on the first day of the next monthly billing period which begins at least 15 business days after the day on which the customer reports the revised jurisdictional information to the Telephone Company.

In the event the customer fails to provide a report for one or more quarters, the Telephone Company will use the most recently provided quarterly report for subsequent bills until the customer provides an updated report.

No revisions to bills preceding the effective date of the revised jurisdictional information will be made based on this report.

TARIFF BRANCH
RECEIVED
7/17/2006
PUBLIC SERVICE
COMMISSION
OF KENTUCKY

ISSUED: August 20, 2009
BY: Vice President
Lexington, Kentucky

EFFECTIVE: September 4, 2009

ACCESS SERVICE

6. Switched Access Service (Cont'd)

6.5 Rate Categories, Applications, and Regulations (Cont'd)

6.5.5 Determination of Access Minutes (Cont'd)

(H) Jurisdictional Determination (Cont'd)

(5) The PIUs described above are applied to associated usage rated elements and services, e.g., Information Surcharge, Local Switching, Tandem Switched Transport, Tandem Switching and Transport Interconnection charges. The PIUs are also used to develop the carrier charges. Separate PIUs are required for flat rated Entrance Facilities, Direct Trunked Transport and Mulitplexers. (N)

(a) There may be some portion of terminating minutes where it is not possible to know and therefore to send, the needed originating number information. A "floor" of 7.00 percent (%) will be set for terminating minutes lacking originating numbers for all switched access customers.

(1) When the percentage of terminating traffic without sufficient call detail to determine jurisdiction does not exceed the sum of the floor plus a 2.00 percent (%) grace threshold or 9.00 percent (%), the Telephone Company will apply the PIU factor, either provided by the customer or as set forth above.

(2) When the percentage is greater than 9.00 percent (%), the Telephone Company will assess rates from this tariff on all minutes exceeding the floor. For example, if 30 percent (%) of a customer's terminating minutes sent to the Telephone Company do not contain sufficient originating information to allow the Telephone Company to determine the originating location, then the Telephone Company would apply the provisions of this tariff to those minutes exceeding the floor, or 23 percent (%) in this example.

In the event that the Telephone Company applies rates to terminating calls without originating number information as provided in this tariff, customers will have the opportunity to request backup documentation of the Telephone Company's basis for such application, and further request that the Telephone Company change the application of the intrastate access rate upon a showing by the customer of why the intrastate rate should not be applied. (N)

TARIFF BRANCH
RECEIVED
8/20/2009
PUBLIC SERVICE
COMMISSION
OF KENTUCKY

ISSUED: December 23, 2011
BY: Vice President
Lexington, Kentucky

EFFECTIVE: January 7, 2012

ACCESS SERVICE

6. Switched Access Service (Cont'd)

6.5 Rate Categories, Applications, and Regulations (Cont'd)

6.5.5 Determination of Access Minutes (Cont'd)

I. Identification and Rating of VoIP-PSTN Traffic

(A) Scope

(1) VoIP-PSTN traffic is defined as traffic exchanged over the public switched telephone network ("PSTN") facilities that originates and/or terminates in Internet protocol ("IP") format. This section governs the identification of toll VoIP-PSTN ("toll VoIP") traffic that in the absence of an interconnection agreement will be subject to interstate switched access rates in accordance with the Federal Communications Commission Report and Order in WC Docket Nos. 10-90, etc., FCC Release No. 11-161 (Nov. 18, 2011) ("FCC Order") as it may hereinafter be amended or clarified. Specifically, this section establishes the method of distinguishing toll VoIP traffic from the customer's total intrastate access traffic, so that toll VoIP traffic will be billed in accordance with the FCC Order.

(2) This section will be applied to the billing of switched access charges to a customer that is a local exchange carrier only to the extent that the customer has also implemented billing of interstate access charges for VoIP-PSTN Traffic in accordance with the FCC Order.

(B) Rating of toll VoIP-PSTN traffic

The Telephone Company will bill toll VoIP-PSTN traffic which it identifies in accordance with this tariff section at rates equal to the Telephone Company's applicable tariffed interstate switched access rates.

(C) Calculation and Application of Percent-VoIP-Usage Factor

The Telephone Company will determine the number of toll VoIP traffic minutes of use ("MOU") to which it will apply its interstate rates under subsection (B), above, by applying an originating Percent VoIP Usage ("OPVU") factor to the total intrastate access MOU originated by a Telephone Company end user and delivered to the customer and by applying a terminating PVU ("TPVU") factor to the total intrastate access MOU terminated by a customer to the Telephone Company's end user. The OPVU and TPVU will be derived and applied as follows:

(1) The customer will calculate and furnish to the Telephone Company an OPVU factor, along with supporting documentation, representing the whole number percentage of the customer's total originating intrastate access MOU that the customer receives from the Telephone Company in the State that is originated by the Telephone Company in IP format.

(2) The customer will calculate and furnish to the Telephone Company a TPVU factor, along with supporting documentation, representing the whole number percentage of the customer's total terminating intrastate access MOU that the customer exchanges with the Telephone Company in the State that is sent to the Telephone Company and originated in IP format.

KENTUCKY
PUBLIC SERVICE COMMISSION
JEFF R. DEROUEN
EXECUTIVE DIRECTOR
TARIFF BRANCH
Bunt Kirtley
EFFECTIVE
1/7/2012
PURSUANT TO 807 KAR 5:011 SECTION 9 (1)

ACCESS SERVICE

6. Switched Access Service (Cont'd)

6.5 Rate Categories, Applications, and Regulations (Cont'd)

6.5.5 Determination of Access Minutes (Cont'd)

I. Identification and Rating of VoIP-PSTN Traffic (Cont'd)

(C) Calculation and Application of Percent-VoIP-Usage Factor (Cont'd)

(3) The OPVU, TPVU and supporting documentation shall be based on information that is verifiable by the Telephone Company including but not limited to the number of the customer's retail VoIP subscriptions in the state (*e.g.*, as reported on FCC Form 477), traffic studies, actual call detail, or other relevant and verifiable information. The customer shall not modify its reported PIU factor to account for VoIP-PSTN traffic.

(4) After the Telephone Company verifies the OPVU and TPVU provided by the customer the Telephone Company will apply the OPVU and TPVU factors to the associated intrastate access MOU as indicated in Sections (D) and/or (E) below.

In the event that the Telephone Company can not verify the customer's OPVU and/or TPVU, the Telephone Company will request additional information to support the OPVU and/or TPVU, during this time no changes will be made to the existing OPVU and /or TPVU. The customer shall supply the requested additional information within 15 days of the Telephone Company's request or no changes will be made to the existing OPVU and/or TPVU. If after review of the additional information, the customer and Telephone Company establish a revised and mutually agreed upon OPVU and/or TPVU factor, the Telephone Company will begin using the new factor with the next bill period.

If the dispute is unresolved the customer may request that verification audits be conducted by an independent auditor, at customer's sole expense. During the audit, the most recent undisputed OPVU and/or TPVU factor will be used by the Telephone Company.

(5) In the absence of an interconnection agreement, at no time will the Telephone Company allow an OPVU or TPVU factor greater than the applicable State percentage as identified in Paragraph 963 of the FCC Order.

KENTUCKY
PUBLIC SERVICE COMMISSION
JEFF R. DEROUEN
EXECUTIVE DIRECTOR
TARIFF BRANCH
Bunt Kirtley
EFFECTIVE
1/7/2012
PURSUANT TO 807 KAR 5:011 SECTION 9 (1)

ACCESS SERVICE

6. Switched Access Service (Cont'd)

6.5 Rate Categories, Applications, and Regulations (Cont'd)

6.5.5 Determination of Access Minutes (Cont'd)

I. Identification and Rating of VoIP-PSTN Traffic (Cont'd)

(D) Initial OPVU and TPVU Factor

In calculating the initial OPVU and TPVU factor(s), the Telephone Company will take the factor(s) provided by the customer into account retroactively to January 1, 2012, *provided that* the customer provides the factor(s) and supporting documentation, as specified in subsection (C) above to the Telephone Company no later than 15 days after the effective date of this tariff. If the customer does not furnish the Telephone Company with an OPVU and/or TPVU factor pursuant to the preceding subsection (C), the initial factor will be zero.

(E) OPVU and TPVU Factor Updates

The customer may update the OPVU and/or TPVU factor(s) semi-annually using the method set forth in subsection (C), above. If the customer chooses to submit such updates, it shall forward to the Telephone Company, no later than 15 days after the first day of January and/or July of each year, a revised OPVU and/or TPVU factor and supporting documentation based on data for the prior three months, ending the last day of December and/or June, respectively. Once verified by the Telephone Company the revised OPVU and/or TPVU factor will apply prospectively and serve as the basis for billing until superseded by a new verified factor.

KENTUCKY
PUBLIC SERVICE COMMISSION
JEFF R. DEROUEN
EXECUTIVE DIRECTOR
TARIFF BRANCH
Bunt Kirtley
EFFECTIVE
1/7/2012
PURSUANT TO 807 KAR 5:011 SECTION 9 (1)

ISSUED: JULY 17, 2006
BY: Vice President
Lexington, Kentucky

EFFECTIVE: AUGUST 1, 2006

ACCESS SERVICE

6. Switched Access Service (Cont'd)

6.5 Rate Categories, Applications, and Regulations (Cont'd)

6.5.5 Determination of Access Minutes(Cont'd)

(A) Rates are applied either as premium rates or nonpremium rates. Nonpremium rates are discounted access minute rates for measured or assumed access minutes.

The Interconnection Charge, End Office Switching and the Information Surcharge rates are applied either as premium rates or nonpremium rates. The Entrance Facility, Direct-Trunked Transport, Tandem-Switched Transport and multiplexing rate elements are not subject to premium and nonpremium rating.

The specific application of these rates for a customer is dependent upon the Switched Access Service and the availability of equal access capabilities in the end office to which the service is provided.

(1) The following rules provide the basis for applying the rates and charges:

(a) Premium rates apply to all:
(b) FGC and FGD, access minutes,

(c) FGA and FGB, access minutes that originate from or terminate at end offices or entry switches equipped with equal access (i.e., FGD) capabilities, except those end offices subtending a centralized Telephone Company equal access tandem where the use of a 10XXX or 101XXXX access code is not available,

(d) 500, 800, 877, 888 and 900 access minutes that originate from end offices equipped with equal access (i.e., FGD) capabilities,

(e) All originating and terminating access minutes where the service is provided to AT&T, and

When an end office is converted to an equal access end office, the FGA and FGB customers will have the choice of converting existing services to equal access (i.e., FGD) at no charge, as set forth in 6.5.4(E) preceding or retaining the existing services. Except for those end offices set forth in (b) preceding, premium rates will apply to the total access minutes beginning on the actual conversion date, whether the customer chooses to convert to FGD or retain existing services. Existing FGC service must be converted to FGD service when an end office is converted to equal access.

TARIFF BRANCH
RECEIVED
7/17/2006
PUBLIC SERVICE
COMMISSION
OF KENTUCKY

ISSUED: JULY 17, 2006
BY: Vice President
Lexington, Kentucky

EFFECTIVE: AUGUST 1, 2006

ACCESS SERVICE

6. Switched Access Service (Cont'd)

6.5 Rate Categories, Applications, and Regulations (Cont'd)

6.5.5 Determination of Access Minutes(Cont'd)

(A) (Cont'd)

(2) Nonpremium rates apply to all FGA and FGB, access minutes (measured or assumed) and all 500 Access Service, 800/877/888 Access Service and 900 Access Service access minutes that originate from or terminate at end offices not equipped with equal access capabilities, except where the service is provided to AT&T. Nonpremium rates also apply to all FGA and FGB, access minutes originating from or terminating to an end office subtending a centralized Telephone Company equal access tandem where the use of a 10XXX or 101XXXX access code is not available.

Where originating and/or terminating measurement capability does not exist for FGA and FGB provided to an entry switch, the number of access minutes that will be assumed are as set forth in Section 6.6 following.

(B) Transition Billing Arrangement

(1) When FGA or FGB Switched Access Service provided to an entry switch (i.e., dial tone office for FGA and Telephone Company access tandem for FGB) has usage originating from and/or terminating at both end offices that have been converted to equal access and end offices that have not been converted, the premium and nonpremium rates will apply in the following manner.

(2) All access minutes that originate from or terminate at the equal access end office(s) will be billed at premium rates. Access minutes that originate from or terminate at end offices not equipped with equal access capabilities, hereinafter referred to as nonpremium access minutes, will continue to be billed at nonpremium rates. Nonpremium usage rates will apply as follows depending on the type of service.

(3) The number of nonpremium access minutes to be billed at nonpremium rates is derived by subtracting the number of premium rated access minutes from the total number of access minutes.

TARIFF BRANCH
RECEIVED
7/17/2006
PUBLIC SERVICE
COMMISSION
OF KENTUCKY

ISSUED: JULY 17, 2006
BY: Vice President
Lexington, Kentucky

EFFECTIVE: AUGUST 1, 2006

ACCESS SERVICE

6. Switched Access Service (Cont'd)

6.5 Rate Categories, Applications, and Regulations (Cont'd)

6.5.5 Determination of Access Minutes(Cont'd)

(B) Transition Billing Arrangement (Cont'd)

(4) The number of access minutes to be rated as premium access minutes is determined as follows:

Where end office specific usage data is available, premium rates apply to the measured access minutes originating from or terminating at the equal access end office(s) excluding access minutes originating or terminating at end offices subtending a centralized Telephone Company equal access tandem as specified in (A)(2) preceding.

Where measurement capability does not exist and/or end office specific usage data is not available, originating and/or terminating usage will be apportioned between premium and nonpremium usage as described following:

(5) The usage to be apportioned will be the recorded usage or the assumed usage for FGA and FGB,. Such apportionment will be based on the ratio of the number of subscriber lines in the access area (i.e., local calling area, or end offices subtending the Telephone Company access tandem, as appropriate) of the entry switch that are served by equal access end offices to the total number of subscriber lines in that access area. The ratio thus developed is applied to the total measured or assumed originating FGA usage, terminating FGA usage, originating FGB usage or terminating FGB usage, as applicable, to determine the usage to be billed at premium rates.

The ratios used to determine the premium usage, as set forth in (4) above, will be updated on a quarterly basis and provided to the customer with the last bill rendered for the preceding quarter or mailed separately within five working days after the first day of the new quarter. Information regarding the data used to derive the ratios will be provided to the customer upon reasonable request.

TARIFF BRANCH
RECEIVED
7/17/2006
PUBLIC SERVICE
COMMISSION
OF KENTUCKY

ISSUED: JULY 17, 2006
BY: Vice President
Lexington, Kentucky

EFFECTIVE: AUGUST 1, 2006

ACCESS SERVICE

6. Switched Access Service (Cont'd)

6.5 Rate Categories, Applications, and Regulations (Cont'd)

6.5.5 Determination of Access Minutes (Cont'd)

(B) Transition Billing Arrangement (Cont'd)

(6) For purposes of administering this provision: (1) subscriber lines are defined as exchange service lines, Centrex line and Centrex-type lines provided by the Telephone Company under its local and/or general exchange service tariff; (2) the access area is defined as the local calling area of the dial tone office for originating and terminating FGA, and all end offices subtending the Telephone Company access tandem for originating and terminating FGB; and (3) the local calling area of the dial tone office is as defined in the Telephone Company's local and/or general exchange service tariff.

6.5.6 (Reserved for Future Use)

6.5.7 Minimum Periods and Charges

(A) Minimum Periods

Switched Access Service is provided for a minimum period of one month.

(B) Minimum Monthly Charge

Switched Access Service is subject to a minimum monthly charge. The minimum charge applies for the total capacity of service provided.

For all Switched Access Arrangements, the minimum monthly charge is the sum for the Local Switching, Local Transport and Information Surcharge charges set forth in 6.6 and the Carrier Common Line charges set forth in 3.7 for the measured or assumed usage for the month.

TARIFF BRANCH
RECEIVED
7/17/2006
PUBLIC SERVICE
COMMISSION
OF KENTUCKY

ISSUED: JULY 17, 2006
BY: Vice President
Lexington, Kentucky

EFFECTIVE: AUGUST 1, 2006

ACCESS SERVICE

6. Switched Access Service (Cont'd)

6.5 Rate Categories, Applications, and Regulations (Cont'd)

6.5.8 Application of Rates for FGA Extension Service

When a FGA extension service is provided with additional terminations of the service at different building(s) in the same or a different Local Serving Area, the FGA extensions within the Local Serving Area are provided and charged for under the Telephone Company's local and/or general exchange service tariffs, and the FGA extensions in different Local Serving Areas are provided and charged for as Special Access Service. The applicable rate elements which may apply are: A Voice Grade Circuit Termination, Circuit Mileage, and Signaling Capability (optional features and functions). All appropriate monthly rates and nonrecurring charges set forth in 7.5.5 following will apply.

TARIFF BRANCH
RECEIVED
7/17/2006
PUBLIC SERVICE
COMMISSION
OF KENTUCKY

ISSUED: JULY 17, 2006
BY: Vice President
Lexington, Kentucky

EFFECTIVE: AUGUST 1, 2006

ACCESS SERVICE

6. Switched Access Service (Cont'd)

6.5 Rate Categories, Applications, and Regulations (Cont'd)

6.5.9 Application of Rates for Extended FGA Terminating Service

(A) For calls established on a 1+ or expanded seven digit measured calling basis, outside the specific FGA Access Area, however inside the LATA, in conjunction with terminating FGA traffic to an end office, the following rates apply:

- for each access minute, the rates per access minute for Local Switching and the Information Surcharge.

- for each access minute, the Tandem-Switched Transport Facility rate per access minute per airline mile and the Tandem-Switched Transport-Termination per access minute per termination.

When the serving wire center of the customer's premises is the dial tone office, the Tandem-Switched Transport-Facility rate is applicable and mileage is measured from the serving wire center (i.e., the dial tone office) of the customer's premises to the end office.

When the serving wire center of the customer's premises is not the dial tone office, the Direct-Trunked Transport rate is applicable for mileage measured between the serving wire center of the customer's premises and the dial tone office. The Tandem-Switched Transport-Facility rate is applicable for mileage measured between the dial tone office and the end office.

The Tandem-Switching rate is not applicable for Extended FGA terminating traffic.

Where the FGA call terminates at an end office equipped with Equal Access, premium usage rates apply. Where the FGA call terminates at an end office not equipped with Equal Access, non-premium usage rates apply.

(B) When FGA terminating traffic is extended outside the LATA, Switched Access rate elements will be billed to the FGA customer for the terminating interLATA access function provided via the FGA connection, and Switched Access rate elements will be billed to the IC providing the interLATA service to the FGA customer for the originating interLATA access function.

(C) Rates for FGA calls terminated to NXXs outside the FGA Access Area as set forth in the preceding paragraphs are in addition to the applicable FGA rates charged within the FGA Access Area for each such call.

TARIFF BRANCH
RECEIVED
7/17/2006
PUBLIC SERVICE
COMMISSION
OF KENTUCKY

ISSUED: JULY 17, 2006
BY: Vice President
Lexington, Kentucky

EFFECTIVE: AUGUST 1, 2006

ACCESS SERVICE

6. Switched Access Service (Cont'd)

6.5 Rate Categories, Applications, and Regulations (Cont'd)

6.5.10 Network Blocking Charge for Feature Group D

In the event that a customer's FGD trunk group blocking threshold stated below is exceeded, the customer will be notified by the Telephone Company to increase its capacity (busy hour minutes of capacity or quantities of trunks) when excessive trunk group blocking occurs on groups carrying FGD traffic and the measured access minutes for that hour exceed the capacity purchased. The blocking thresholds are predicted on time consistent, hourly measurements over a 30 day period excluding Saturdays, Sundays and national holidays. If the order for additional capacity has not been received by the Telephone Company within 15 days of the notification, the Company will bill the customer, at the rate set forth in 6.6(N) following, for each overflow in excess of the blocking threshold when (1) the average "30 day period" overflow exceeds the threshold level for any particular hour and (2) the "30 day period" measured average originating or two-way usage for the same clock hour exceeds the capacity ordered.

Blocking Thresholds

Trunks in Service	1%	1/2%
1-2	.070	.045
3-4	.050	.035
5-6	.040	.025
7 or greater	.030	.030

The 1% blocking threshold is for transmission paths carrying traffic direct (without an alternate route) between an end office and a customer's premises. The 1/2% blocking threshold is for transmission paths carrying first routed traffic between an end office and a customer's premises via a Telephone Company access tandem.

TARIFF BRANCH
RECEIVED
7/17/2006
PUBLIC SERVICE
COMMISSION
OF KENTUCKY

ISSUED: JULY 17, 2006
BY: Vice President
Lexington, Kentucky

EFFECTIVE: AUGUST 1, 2006

ACCESS SERVICE

6. Switched Access Service (Cont'd)

6.5 Rate Categories, Applications, and Regulations (Cont'd)

6.5.11 Shared Use Facilities

When a Special Access service and Switched Access service is provided over the same Wideband Analog or High Capacity facility through a common interface, the facility will be considered as part of the Special Access Service, and will be ordered, provided, and rated as set forth in 7.2.5 following.

Switched Access Service rates and charges will apply for each channel of the shared use facility that is used to provide switched access service.

6.5.12 Carrier Identification Parameter (CIP)

The Carrier Identification Parameter (CIP) provides for the transmission of the Carrier Identification Code (CIC) or the access code 101XXXX to the customer with the Initial Address Message (IAM). CIP will be populated by a 4-digit CIC at the rates shown in 6.6(S). The monthly recurring rate is applicable per trunk. The nonrecurring charge is applicable per CIC, per trunk group. The nonrecurring charge has two rate levels. There is a nonrecurring charge applicable to trunk groups direct to the access tandem and a nonrecurring charge applicable to trunk groups direct to an end office.

6.5.13 (Reserved for Future Use)

6.5.14 (Reserved for Future Use)

TARIFF BRANCH
RECEIVED
7/17/2006
PUBLIC SERVICE
COMMISSION
OF KENTUCKY

ISSUED: JULY 17, 2006
BY: Vice President
Lexington, Kentucky

EFFECTIVE: AUGUST 1, 2006

ACCESS SERVICE

6. Switched Access Service (Cont'd)

6.5 Rate Categories, Applications, and Regulations (Cont'd)

6.5.15 (Reserved for Future Use)

TARIFF BRANCH
RECEIVED
7/17/2006
PUBLIC SERVICE
COMMISSION
OF KENTUCKY

ACCESS SERVICE

6. Switched Access Service (Cont'd)

6.6 Switched Access Rates and Charges

		Premium		Nonpremium		
		Per Originating Access Minutes	Per Terminating Access Minute	Per Originating Access Minute	Per Terminating Access Minute	
(A)	Local Switching Bundled (EOSB)	$.01379	$.000440	$.00621	$.000000	(R)
	Local Switching - Unbundled (EOSU) - Circuit Switched Line	.01379	.000440	.00621	.000000	(R)
	Local Switching - Unbundled (EOSU) - Circuit Switched Trunk	.01379	.000440	.00621	.000000	(R)
(B)	Information Surcharge	.0000895	.000000	.0000403	.000000	

(C) Entrance Facility - 2-Wire and 4-Wire Voicegrade

Service Installation Charge Per Entrance Facility (USOC: EFG2X)	Entrance Facility - 2-Wire Voicegrade Monthly Rate (USOC: EFG2X)	Entrance Facility - 4-Wire Voicegrade Monthly Rate (USOC: EFG4X)
$215.00	$3.52	$47.99

(D) Entrance Facility - DS1

Service Installation Charge Per Entrance Facility (USOC: EFGDX)	Entrance Facility - DS1 Monthly Rate (USOC: EFGDX)
$303.00	$366.21

(E) Entrance Facility - DS3

Service Installation Charge Per Entrance Facility (USOC: EFGDX)	Entrance Facility - DS3 Monthly Rate (USOC: EFGDX)
$333.00	$1,200.00

Date of Issue: June 13, 2016

Date Effective: July 1, 2016

Issued By: Chris Cranford

Title: Product Manager – Pricing & Tariffs

By Authority of Order of the Public Service Commission

In Case No. _____ Dated: _____

KENTUCKY
PUBLIC SERVICE COMMISSION
Talina R. Mathews
EXECUTIVE DIRECTOR
TARIFF BRANCH
Bunt Kirtley
EFFECTIVE
7/1/2016
PURSUANT TO 807 KAR 5:011 SECTION 9 (1)

ACCESS SERVICE

6. Switched Access Service (Cont'd)

6.6 Switched Access Rates and Charges (Cont'd)

(F) Direct-Trunked Transport - Voicegrade

Direct-Trunked Transport - Mileage Voicegrade Per Mile, Per Month (USOC: 1YT1S)	Direct-Trunked Transport - Fixed Voicegrade Per Facility (USOC: 1YT1S)	
$1.24	$22.00	(I)(R)

(G) Direct-Trunked Transport - DS1

Direct-Trunked Transport – Mileage DS1 Per Mile, Per Month (USOC: 1YTXS)	Direct-Trunked Transport - Fixed DS1 Per Facility (USOC: 1YT1S)	
$15.15	$40.70	(R)(R)

(H) Direct-Trunked Transport - DS3

Direct-Trunked Transport – Mileage DS3 Per Mile, Per Month (USOC: 1YTXS)	Direct-Trunked Transport - Fixed DS3 Per Facility (USOC: 1YT1S)	
$86.00	$670.00	(R)(R)

(I) Tandem-Switched Transport - Facility

	Tandem-Switched Transport-Facility Per Access Minute, Per Airline Mile	
Originating	$.000040	(T)
Terminating	$.000092	(I)

Date of Issue: May 1, 2013

Date Effective: July 1, 2013

Issued By: Chris Cranford

Title: Product Manager – Pricing & Tariffs

By Authority of Order of the Public Service Commission

In Case No. _____ Dated: _____

KENTUCKY
PUBLIC SERVICE COMMISSION
JEFF R. DEROUEN
EXECUTIVE DIRECTOR
TARIFF BRANCH
Bunt Kirtley
EFFECTIVE
7/1/2013
PURSUANT TO 807 KAR 5:011 SECTION 9 (1)

ACCESS SERVICE

6. Switched Access Service (Cont'd)

6.6 Switched Access Rates and Charges

(J) Tandem-Switched Transport - Termination

	Tandem-Switched Transport-Termination Per Access Minute, Per Termination	
Originating	$.000160	(T)
Terminating	$.000277	(I)

(K) Tandem Switching Rate

Tandem-Switching Rate Per Access Minute
$.00000

(L) Interconnection Rate

Premium Rate Interconnection Rate Per Access Minute	Nonpremium Rate Interconnection Rate Per Access Minute
$.0000000	$.0000000

(M) Multiplexing

DS1 to Voice		DS3 to DS1		
Service Installation Charge (USOC: MKW1X; M6W1X)	Monthly Rate (USOC: MKW1X; M6W1X)	Service Installation Charge (USOC: MKW3X; M6W3X)	Monthly Rate (USOC: MKW3X; M6W3X)	
$0.00	$205.06	$0.00	$409.30	(R)(I)(R)(R)

Date of Issue: May 1, 2013

Date Effective: July 1, 2013

Issued By: Chris Cranford

Title: Product Manager – Pricing & Tariffs

By Authority of Order of the Public Service Commission

In Case No. _____ Dated: _____

KENTUCKY
PUBLIC SERVICE COMMISSION
JEFF R. DEROUEN
EXECUTIVE DIRECTOR
TARIFF BRANCH
Bunt Kirtley
EFFECTIVE
7/1/2013
PURSUANT TO 807 KAR 5:011 SECTION 9 (1)

ISSUED: JULY 17, 2006
BY: Vice President
Lexington, Kentucky

EFFECTIVE: AUGUST 1, 2006

ACCESS SERVICE

6. Switched Access Service (Cont'd)

6.6 Switched Access Rates and Charges (Cont'd)

(N) Miscellaneous Switched Access Rates and Charges

	Premium	Basic
800/877/888 Data Base Query Service - Per Query	$.0067	$.0067
		Per ASR
ASR Ordering Charge (USOC: ASROC) (GSEC: SESCLSW)		$ 35.17
		Per Call
FGD Blocking Charge		$ 0.0080
	1st NXX	Each Add'l NXX
900 NXX Translation Nonrecurring Charge Per Order	(USOC: NXSAX) $ 41.60	$ 5.39
500 NXX Translation Nonrecurring Charge Per ASR/Per End Office	$ 23.00	$12.00
USOC:	NWW51X	NW5AX

(O) Service Elements

Alternate Traffic Routing

Premium Nonrecurring Rate Per Trunk Group Equipped (CF3AR)	Nonpremium Nonrecurring Rate Per Trunk Group Equipped (CF3AT)
$72.30	$32.56

Automatic Number Identification - (ANI)

Rate Per ANI Attempt
$0.00014

User Transfer

Monthly Rate Per Line Arranged (EO3)
$1.50

Hunt Group Arrangement

Premium Monthly Rate Per Line Equipped (CF3HG)	Nonpremium Monthly Rate Per Line Equipped (CF3HT)
$21.42	$9.65

Queuing

Premium Monthly Rate Per Group Equipped (CF3QU)	Nonpremium Monthly Rate Per Group Equipped (CF3QT)
$15.00	$ 6.75

TARIFF BRANCH
RECEIVED
7/17/2006
PUBLIC SERVICE COMMISSION OF KENTUCKY

ISSUED: JULY 17, 2006
BY: Vice President
Lexington, Kentucky

EFFECTIVE: AUGUST 1, 2006

ACCESS SERVICE

6. Switched Access Service (Cont'd)

6.6 Switched Access Rates and Charges (Cont'd)

(O) Service Elements (Cont'd)

Uniform Call Distribution

Premium Monthly Rate Per Line Equipped (CF3UD)	Nonpremium Monthly Rate Per Line Equipped (CF3UT)
$5.13	$2.31

Simplified Message Desk Interface (SMDI)

Premium Monthly Rate Per DNAL (SMQPX)	Nonpremium Monthly Rate Per DNAL (SMQNX)
$222.82	$100.34

(P) Remote Call Forwarding

Premium Monthly Rate Per Line (FOMPX)	Nonpremium Monthly Rate Per Line (FOMNX)
$30.27	$13.63

(Q) Direct Inward Dialing (DID)

Monthly Rate Per DID Term (NDT)	Monthly Rate Per Block of 20 Numbers (ND4)
$25.00	$10.00

(R) Billed Number Screening (BNS)

Monthly Rate Per Line (RTVXQ)
$1.00

(S) Carrier Identification Parameter (CIP)

Monthly Rate per trunk group	Nonrecurring Charge per CIC, per direct trunk group access tandem	Nonrecurring Charge per CIC, per direct trunk group end office
$ .46	$ 1,120.00	$ 80.00

(T) Switched Access Assumed Minutes of Use

	Originating Only	Terminating Only	2-Way
Feature Group A	2493	2210	4703
Feature Group B	5042	5042	5042

TARIFF BRANCH
RECEIVED
7/17/2006
PUBLIC SERVICE
COMMISSION
OF KENTUCKY

ACCESS SERVICE

6. Switched Access Service (Cont'd)

6.6 Switched Access Rates and Charges (Cont'd)

		Rate	
(Q)	End office Common Trunk Port		
	Per Terminating Access Minute	$.000121	(R)
(P)	End office Direct Trunk Port		
	Voice Grade - Per Trunk per Month	$6.81	(R)
	DS1 - Per Trunk per Month	$3.97	(R)
(P)	Tandem Direct Trunk Port		
	Voice Grade - Per Trunk per Month	$13.12	
	DS1 - Per Trunk per Month	$ 5.33	

KENTUCKY
PUBLIC SERVICE COMMISSION
Talina R. Mathews
EXECUTIVE DIRECTOR
TARIFF BRANCH
Bunt Kirtley
EFFECTIVE
7/1/2016
PURSUANT TO 807 KAR 5:011 SECTION 9 (1)

ISSUED: JULY 17, 2006
BY: Vice President
Lexington, Kentucky

EFFECTIVE: AUGUST 1, 2006

ACCESS SERVICE

7. Special Access Service

7.1 Provision of Special Access Service

Special Access Service provides a dedicated transmission path to connect customer designated premises*, either directly or through a Company hub where bridging or multiplexing functions are performed. Special Access Service may also be combined with Switched Access Services in the provision of a customer's intrastate communications service (e.g., WATS, 800/877/888 or WATS-type Services). Interexchange carriers are allowed to utilize Telephone Company special access in the provisioning of IXC provided intraLATA interexchange foreign exchange and private line services. IntraLATA interexchange services must be ordered to the carrier's CDL. Special Access Service includes all exchange access not utilizing Company central office switches.

Certain Special Access Services listed in this section of the tariff may not be currently offered in all Company locations but may be provided upon customer request, on an individual case basis, if facilities can be made available with reasonable effort. The Company will work cooperatively with the Customer to provide the service on a timely basis.

7.1.1 Circuit Types

There are nine types of circuits used to provide Special Access Services:

- Metallic (MT)
- Telegraph Grade (TG)
- Voice Grade (VG)
- Program Audio (PA)
- Video (TV)
- Wideband Analog (WA)
- Wideband Data (WD)
- Digital Data (DA)
- High Capacity (HC)

These circuits can be either analog or digital. Analog circuits are differentiated by frequency spectrum and bandwidth. Digital connections are differentiated by bit rate.

Each of the nine circuits has its own characteristics. All of the circuit types are subdivided by one or more of the following:

- Transmission specifications,
- Bandwidth,
- Speed (i.e., bit rate),
- Spectrum

* Company Centrex CO-like switches are considered to be customer premises for purposes of this tariff.

TARIFF BRANCH
RECEIVED
7/17/2006
PUBLIC SERVICE
COMMISSION
OF KENTUCKY

ISSUED: JULY 17, 2006
BY: Vice President
Lexington, Kentucky

EFFECTIVE: AUGUST 1, 2006

ACCESS SERVICE

7. Special Access Service (Cont'd)

7.1 Provision of Special Access Service (Cont'd)

7.1.1 Circuit Types (Cont'd)

The circuit description set forth in this section specify the characteristics of the basic circuit and indicates whether the circuit is provided between customer designated premises or between a customer designated premises and a Company hub where bridging or multiplexing functions are performed, or between a customer designated premises and a Company office capable of combining switched or special access services or a WATS Serving Office.

Customers can order a basic circuit and select from a list of available technical specifications packages (customized or predefined), channel interfaces, and optional features to design a circuit which meets the Customer's specific communications needs. For purposes of ordering circuits, each has been identified as a type of Special Access circuit. However, such identification is not intended to limit a customer's use of the circuit, nor to imply that a circuit is limited to a particular use.

The optional features and functions available with each type of basic circuit are included in the individual service description sections following. The optional features and functions information also indicates with which technical specifications packages they are available.

When a customized circuit is ordered, the Company may determine that Additional Engineering is required to meet the customer's request for service. The customer will be notified whether Additional Engineering charges apply and will be given an estimate of the hours to be billed before any further action is taken on the order. Additional engineering charges are determined as set forth in 8.1 following.

TARIFF BRANCH
RECEIVED
7/17/2006
PUBLIC SERVICE
COMMISSION
OF KENTUCKY

ISSUED: JULY 17, 2006
BY: Vice President
Lexington, Kentucky

EFFECTIVE: AUGUST 1, 2006

ACCESS SERVICE

7. Special Access Service (Cont'd)

7.1 Provision of Special Access Service (Cont'd)

7.1.2 Service Configurations

There are two types of service configurations over which Special Access Services are provided: two-point service and multipoint service.

(A) Two-Point Service

A two-point service connects two customer designated premises, either on a directly connected basis or through a hub where multiplexing functions are performed. A Voice Grade Special Access Circuit may be provided as a two-point service connecting an end user premises and a Company switch when Special Access is used in conjunction with Switched Access as set forth in 6.3.2(T) for Switched Access Interface.

All types of Special Access Service may be provided as two-point service.

The following diagram depicts an example of a two-point Voice Grade service connecting two customer designated premises located 15 miles apart. The service is provided with the optional feature of C-Type conditioning.

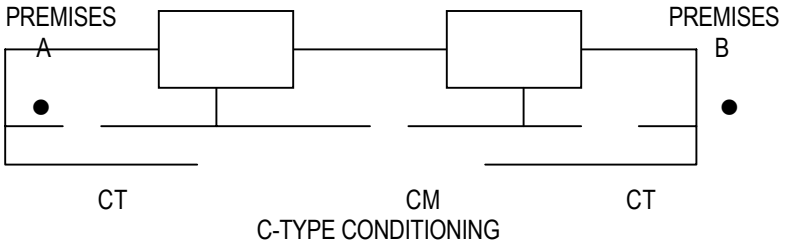

CT - Circuit Termination
CM - Circuit Mileage
SWC - Serving Wire Center

Applicable rate elements are:

- Circuit Termination (2 applicable)
- Circuit Mileage (fixed rate plus rate per airline mile between SWC)
- C-Type Conditioning Optional Feature

In addition, a Special Access Surcharge, Message Station Equipment Recovery Charge, and Charges for additional Optional Features and Functions may apply.

TARIFF BRANCH
RECEIVED
7/17/2006
PUBLIC SERVICE
COMMISSION
OF KENTUCKY

ISSUED: JULY 17, 2006
BY: Vice President
Lexington, Kentucky

EFFECTIVE: AUGUST 1, 2006

ACCESS SERVICE

7. Special Access Service (Cont'd)

7.1 Provision of Special Access Service (Cont'd)

7.1.2 Service Configurations (Cont'd)

(B) Multipoint Service

Multipoint service connects three or more customer designated premises through a Company hub (i.e., bridging locations). Only certain types of Special Access Service are provided as multipoint service. These are so designated in the Service Descriptions for the appropriate circuit.

The circuit between hubs on a multipoint service is a mid-link. There is no limitation on the number of mid-links, but the use of more than three mid-links in tandem may degrade the quality of multi-point facilities.

Multipoint service utilizing a customized technical specifications package, as set forth in 7.1.3, will be provided when technically possible.

When ordering, the customer will specify the desired bridging hub(s). National Exchange Carrier Association Traffic FCC No. 4 identifies serving wire centers, hub locations and the type of bridging functions available.

TARIFF BRANCH
RECEIVED
7/17/2006
PUBLIC SERVICE
COMMISSION
OF KENTUCKY

ISSUED: JULY 17, 2006
BY: Vice President
Lexington, Kentucky

EFFECTIVE: AUGUST 1, 2006

ACCESS SERVICE

7. Special Access Service (Cont'd)

7.1 Provision of Special Access Service (Cont'd)

7.1.2 Service Configurations (Cont'd)

(B) Multipoint Service (Cont'd)

The following diagram depicts an example of a Voice Grade multipoint service connecting four customer premises via two customer specified bridging hubs.

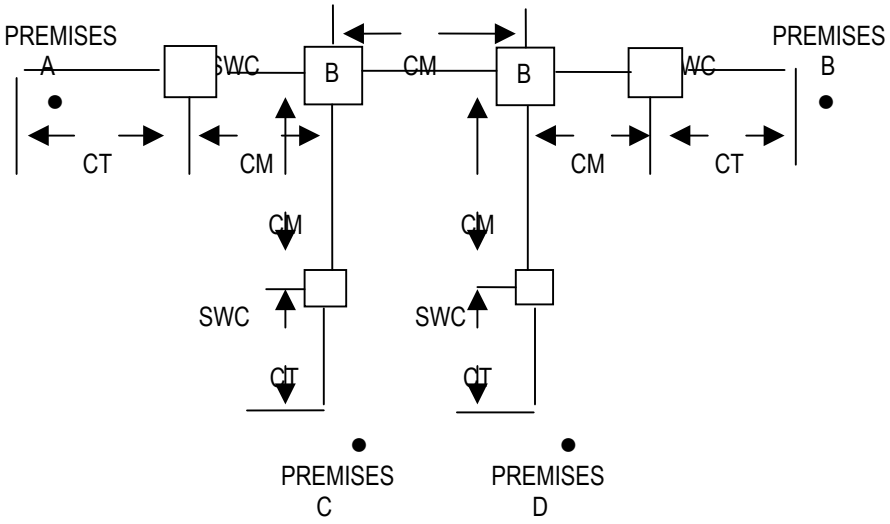

CT - Circuit Termination
CM - Circuit Mileage
B - Bridging
SWC – Serving Wire Center

Applicable rate elements are:

- Circuit Termination (4 applicable)
- Circuit Mileage (5 sections-fixed rate plus per mile between SWC)
- Bridging Optional Features (6 applicable, i.e., each bridge port)

In addition, the Special Access Surcharge, Message Station Equipment Recovery Charge, and charges for other Optional Features and Functions may be applicable.

TARIFF BRANCH
RECEIVED
7/17/2006
PUBLIC SERVICE
COMMISSION
OF KENTUCKY

ISSUED: JULY 17, 2006
BY: Vice President
Lexington, Kentucky

EFFECTIVE: AUGUST 1, 2006

ACCESS SERVICE

7. Special Access Service (Cont'd)

7.1 Provision of Special Access Service (Cont'd)

7.1.3 Technical Specifications Packages

Information pertaining to the technical specifications packages indicates the transmission parameters that are available with each package. This information is included in each individual service description section in 7.3 through 7.11 following, in a matrix format with the transmission parameters listed down the left side and the packages listed across the top. Each package is identified by a code, e.g., VGC. The first two letters of the code indicate the category of Special Access Service to which the parameters are applicable. These two letter codes are shown above in parentheses following the category of Special Access Service.

The letter "C" following the two letter code indicates the technical specifications package for a customized service. A numeric or alphanumeric designation following the two letter code indicates the specific predefined package. For a customized service, the customer may select any parameters available with that category of service as long as the parameters are compatible. When appropriate, the Technical Reference, which contains detailed specifications for the parameters, is shown following the matrix.

All services installed after the effective date of this tariff will conform to the transmission specification standards contained in this tariff or in the following Technical References for each category of service:

Metallic	PUB	TR-NPL-000336
Telegraph Grade	PUB	TR-NPL-000336
Voice Grade	PUB	TR-NPL-000335
	PUB	41004, Table 4
Program Audio	PUB	62503 and associated Addendum
Video	PUB	TR-NPL-000338
Wideband Analog	PUB	62505 and associated Addendum
Wideband Data	PUB	62506
Digital Data	PUB	62507
	PUB	62310
High Capacity	PUB	62508
		62411

TARIFF BRANCH
RECEIVED
7/17/2006
PUBLIC SERVICE
COMMISSION
OF KENTUCKY

ISSUED: JULY 17, 2006
BY: Vice President
Lexington, Kentucky

EFFECTIVE: AUGUST 1, 2006

ACCESS SERVICE

7. Special Access Service (Cont'd)

7.1 Provision of Special Access Service (Cont'd)

7.1.3 Technical Specifications Packages (Cont'd)

The Company will maintain existing transmission specifications on services installed prior to the effective date of this tariff, except that existing services with performance specifications exceeding the standards listed in this provision will be maintained at the performance levels specified in this tariff.

Customized technical specifications packages will be provided where technically feasible. If the Company determines that the requested parameter specifications are not compatible, the customer will be advised and given the opportunity to change the order.

7.1.4 Channel Interfaces

Channel interfaces at each point of termination on a two-point service may be symmetrical or asymmetrical. On a multipoint service they may also be symmetrical and asymmetrical, but communications can only be provided between compatible channel interfaces. Only certain channel interfaces are compatible. These are set forth in 9. following, in a combination format.

Only certain channel interface combinations are available with the predefined technical specifications packages. These are delineated in the Technical References set forth in 7.1.3 preceding. When a customized circuit is requested, all channel interface combinations available with the specified type of service are available with the customized circuit.

7.1.5 Alternate Use

Alternate Use occurs when a service is arranged by the Company so that the customer can select different types of transmission at different times. A customer may use a service in any privately beneficial manner. However, where technical or engineering changes are required to effectuate an alternate use, the Company will make such special arrangements available on an individual case basis.

TARIFF BRANCH
RECEIVED
7/17/2006
PUBLIC SERVICE
COMMISSION
OF KENTUCKY

ISSUED: JULY 17, 2006
BY: Vice President
Lexington, Kentucky

EFFECTIVE: AUGUST 1, 2006

ACCESS SERVICE

7. Special Access Service (Cont'd)

7.1 Provision of Special Access Service (Cont'd)

7.1.5 Alternate Use (Cont'd)

The arrangement required to transfer the service from one operation to the other (i.e., the transfer relay and control leads) will be rated and provided on an individual case basis and filed in Section 12., Specialized Service Arrangements. The customer will pay the stated tariff rates for the Access Service rate elements for the service ordered (i.e., Circuit Terminations, Circuit Mileage (as applicable) and Optional Features and Functions [if any]).

7.1.6 Special Facilities Routing

A customer may request that the Special Access used by specially routed. The regulations, rates and charges for Special Facilities Routing are as set forth in Section 11. following.

7.1.7 Design Layout Report

At the customer request, the Company will provide the make-up of the facilities and services provided under this tariff as Special Access Service to aid the customer in designing its overall service. The information will be provided to the customer at no charge in the form of a Design Layout Report and will be reissued or updated whenever the described facilities are materially changed.

7.1.8 Acceptance Testing

At the customer's request, the Company will cooperatively test, at the time of installation and at no additional charge, the following parameters:

(A) For Voice Grade analog services, acceptance testing will include tests for loss, 3-tone slope, DC continuity, operational signaling, C-notched noise, and C-message noise as applicable according to the order for service. Voice Grade services acceptance testing will also include a balance (improved loss) test if the customer has ordered that optional feature.

TARIFF BRANCH
RECEIVED
7/17/2006
PUBLIC SERVICE
COMMISSION
OF KENTUCKY

ISSUED: JULY 17, 2006
BY: Vice President
Lexington, Kentucky

EFFECTIVE: AUGUST 1, 2006

ACCESS SERVICE

7. Special Access Service (Cont'd)

7.1 Provision of Special Access Service (Cont'd)

7.1.8 Acceptance Testing (Cont'd)

For services other than Voice Grade, acceptance tests will include tests for the parameters applicable to the service as specified by the customer in the order for service.

In addition to the above tests, Additional Cooperative Acceptance Testing and Nonscheduled Testing, as described in 8.4 following, are available at the customer's request. All test results will be made available to the customer upon request.

7.1.9 Jurisdictional Determination

(A) Special Access circuits carrying exclusively intrastate traffic will be provided in accordance with the applicable rules and regulations of this tariff.

When mixed interstate and intrastate Special Access Service is provided, the jurisdiction will be determined as follows:

(1) If the customer's estimate of the interstate traffic on the circuit involved constitutes 10% or less of the total traffic on that circuit, the circuit will be provided in accordance with the applicable rules and regulations of the appropriate interstate tariff.

(2) If the customer's estimate of the interstate traffic on the circuit involved constitutes more than 10% of the total traffic on that circuit, the circuit will be provided in accordance with the applicable rules and regulations of the appropriate interstate tariff.

(B) If a billing dispute arises or a regulatory commission questions the reported jurisdiction, the Telephone Company will ask the customer to provide the information the customer uses to determine the jurisdiction of the circuit. The customer shall supply the information within 30 days of the Telephone Company request. The customer shall keep records of system design and functions from which the jurisdiction of its special access circuits can be ascertained. Upon request of the Telephone Company the customer shall make the records available for inspection as reasonably necessary for purposes of verification of the reported jurisdiction.

TARIFF BRANCH
RECEIVED
7/17/2006
PUBLIC SERVICE
COMMISSION
OF KENTUCKY

ISSUED: JULY 17, 2006
BY: Vice President
Lexington, Kentucky

EFFECTIVE: AUGUST 1, 2006

ACCESS SERVICE

7. Special Access Service (Cont'd)

7.1 Provision of Special Access Service (Cont'd)

7.1.9 Jurisdictional Determination (Cont'd)

(C) Customer certification of the jurisdiction of special access circuits is accomplished by indicating the jurisdiction of the circuit (interstate or intrastate) on the Access Service Request. Customer certification of the jurisdiction of special access circuits in place as of the effective date of these revisions shall be provided to the Telephone Company in the form of written correspondence indicating the jurisdiction of each special access circuit.

(D) Customers reporting a change in the jurisdiction of special access circuits subject to individual case basis (ICB) rates and charges set forth in this tariff will not be subject to termination liability charges unless the change results in the termination of the service.

7.2 Rate Categories, Applications and Regulations

This section contains the specific regulations governing the rates and charges that apply for Special Access.

7.2.1 Rate Categories

The following rate categories apply to Special Access Service:

- Circuit Terminations
- Circuit Mileage
- Optional Features and Functions
- Non Recurring Charges
- Special Access Surcharge
- Message Station Equipment Recovery Charge

These rate categories are described in Section 7.2.1(A) through (F) following.

(A) Circuit Termination

The Circuit Termination rate category provides for the communications path between a customer designated premises and the serving wire center of that premises. Included as part of the Circuit Termination is a standard channel interface arrangement which defines the technical characteristics associated with the type of facilities to which the access service is to be connected at the Point of Termination (POT) and the type of signaling capability, if any. The signaling capability itself is provided as an optional feature as set forth in (C) following. One Circuit Termination charge applies per customer designated premises at which the circuit is terminated. This charge will apply even if the customer designated premises and the serving wire center are co-located in a Company building.

TARIFF BRANCH
RECEIVED
7/17/2006
PUBLIC SERVICE
COMMISSION
OF KENTUCKY

ISSUED: JULY 17, 2006
BY: Vice President
Lexington, Kentucky

EFFECTIVE: AUGUST 1, 2006

ACCESS SERVICE

7. Special Access Service (Cont'd)

7.2 Rate Categories, Applications, and Regulations (Cont'd)

7.2.1 Rate Categories (Cont'd)

(B) Circuit Mileage

The Circuit Mileage rate category provides for the end office equipment and transmission facilities between serving wire centers and/or Telephone Company hubs. In addition, when Special Access is used in conjunction with Switched Access Service as set forth in Section 6.3.2(S) preceding for Switched Access Interface, and the end office serving the customer's end user premises is not capable of combining Switched and Special Access or is not a WATS Serving Office, Circuit Mileage is used to extend the Special Access Circuit to a WATS Serving Office or office capable of combining Switched and Special Access Services. The Circuit Mileage charge is composed of a flat monthly charge plus a rate per mile.

(1) Fixed Rate

The fixed rate component of Circuit Mileage is applied only once per Circuit Mileage facility and is also applied when two or more customer designated premises are served by a common serving wire center (i.e., mileage is zero). The Circuit Mileage-Fixed charge is applied in full whether the Company provides one or more than one circuit mileage facility terminations. The Circuit Mileage-Fixed rate does not apply when the Company provides only an intermediate portion of a circuit mileage facility and no circuit mileage facility terminations. When Special Access is used in conjunction with Switched Access where the customer's end user premises for the Special Access facility is served by a Company office capable of combining Switching and Special Access Service, or a WATS Serving Office, the fixed rate does not apply.

TARIFF BRANCH
RECEIVED
7/17/2006
PUBLIC SERVICE
COMMISSION
OF KENTUCKY

ISSUED: JULY 17, 2006
BY: Vice President
Lexington, Kentucky

EFFECTIVE: AUGUST 1, 2006

ACCESS SERVICE

7. Special Access Service (Cont'd)

7.2 Rate Categories, Applications, and Regulations (Cont'd)

7.2.1 Rate Categories (Cont'd)

(B) Circuit Mileage (Cont'd)

(2) Per Mile Rate

The mileage to be used to determine the monthly rate for the per mile portion of Circuit Mileage is calculated on the airline distance between the serving wire centers associated with two customer designated premises, between a serving wire center associated with a customer designated premises and a Company hub, between two Company hubs, or between a Company end office and a WATS serving office, or Company office capable of combining Switched and Special Access Services. The serving wire center from which this customer designated premises is the serving wire center from which this customer designated premises would normally receive dial tone. The methodology for mileage calculation and serving wire center V&H coordinates are specified in National Exchange Carrier Association Tariff FCC. No. 4. Where the calculated miles include a fraction, the value is always rounded up the next full mile.

When hubs are involved, mileage is computed and rates applied separately for each section of the Circuit Mileage, i.e., customer designated premises serving wire center to hub, hub to hub and/or hub to customer designated premises serving wire center. However, when any service is routed through a hub for purposes other than customer specified bridging or multiplexing (e.g., the Company chooses to so route for test access purposes), rates will be applied only to the distance calculated between the serving wire centers associated with the customer designated premises.

When more than one Company is involved in the provision of Special Access Service, the mileage for the per mile component of Circuit Mileage for each Company is calculated as set forth in 2.4.7 preceding.

TARIFF BRANCH
RECEIVED
7/17/2006
PUBLIC SERVICE
COMMISSION
OF KENTUCKY

ISSUED: JULY 17, 2006
BY: Vice President
Lexington, Kentucky

EFFECTIVE: AUGUST 1, 2006

ACCESS SERVICE

7. Special Access Service (Cont'd)

7.2 Rate Categories, Applications, and Regulations (Cont'd)

7.2.1 Rate Categories (Cont'd)

(C) Optional Features and Functions

Optional Features and Functions may be added to a basic circuit service to improve its quality or utility to meet the customer's specific communications requirements. These optional features and functions are identifiable with specific equipment, and represent the end result in terms of performance characteristics which may be obtained. These characteristics may be obtained by using various combinations of equipment. Although the equipment necessary to perform a specified function may be installed at various locations along the path of the service, they will be charged for a single rate element.

Descriptions for each of the available Optional Features and Functions are set forth in Section 7.3 through 7.11 following. Specific rate applications for multiplexing are set forth in 7.2.5 following.

(D) Nonrecurring Charge

Nonrecurring charges are one-time charges that apply for installation of Special Access Services, installation of optional features and functions, and moves and service rearrangements.

(1) Installation of Service

Nonrecurring charges apply to each service installed. The nonrecurring charges for the installation of service are applied per Circuit Termination.

TARIFF BRANCH
RECEIVED
7/17/2006
PUBLIC SERVICE
COMMISSION
OF KENTUCKY

ISSUED: JULY 17, 2006
BY: Vice President
Lexington, Kentucky

EFFECTIVE: AUGUST 1, 2006

ACCESS SERVICE

7. Special Access Service (Cont'd)

7.2 Rate Categories, Applications, and Regulations (Cont'd)

7.2.1 Rate Categories (Cont'd)

(D) Nonrecurring Charge (Cont'd)

(2) Installation of Optional Features and Functions

Nonrecurring charges apply for the installation of some of the optional features and functions available with Special Access Service. The charge applies whether the feature or function is installed coincident with the initial installation of service or at any time subsequent to the installation of the service.

The optional features for which non-recurring charges apply are:

- Voice Grade Data Capability
- Voice Grade Telephoto Capability
- Program Audio Gain Conditioning
- Program Audio Stereo
- Wideband Data Transfer Arrangement

(3) Moves

A move involves a change in the physical location of either the customer's premises or a point of termination at the customer's premises. The charges for the move are dependent on whether the move is to a new location within the same building or to a different building.

(a) Moves Within the Same Building

When the move is to a new location within the same building, the charge for the move will be an amount equal to one half of the nonrecurring (i.e., installation) charge for the service termination affected. There will be no change in the minimum period requirements.

(b) Moves to a Different Building

Moves to a different building will be treated as a discontinuance and a start of service and all associated nonrecurring charges will apply. New minimum period requirements will be established for the new services. The customer will also remain responsible for satisfying all outstanding minimum period charges for the discontinued service.

TARIFF BRANCH
RECEIVED
7/17/2006
PUBLIC SERVICE
COMMISSION
OF KENTUCKY

ISSUED: JULY 17, 2006
BY: Vice President
Lexington, Kentucky

EFFECTIVE: AUGUST 1, 2006

ACCESS SERVICE

7. Special Access Service (Cont'd)

7.2 Rate Categories, Applications, and Regulations (Cont'd)

7.2.1 Rate Categories (Cont'd)

(D) Nonrecurring Charge (Cont'd)

(4) Service Rearrangements

Service rearrangements are changes to existing (installed) services which may be administrative only in nature, or that involve actual physical change to the service. Changes to pending orders are set forth in 5.3.1 preceding.

(a) A charge will not apply to administrative changes as follows:

- Change of customer name,
- Change of customer or customer's end user premises address when the change of address is not a result of a physical relocation of equipment,
- Change in billing data (name, address, or contact name or telephone number),
- Change of agency authorization,
- Change of customer circuit identification,
- Change of billing account number,
- Change of customer test line number,
- Change of customer or customer's end user contact name or telephone number, and
- Change of jurisdiction.

(b) All other service rearrangements will be charged for as follows:

- If the change involves the addition of other customer designated premises to an existing multipoint service, the nonrecurring charge for the Circuit Termination rate element will apply. The charge(s) will apply only for the location(s) that is being added.

TARIFF BRANCH
RECEIVED
7/17/2006
PUBLIC SERVICE
COMMISSION
OF KENTUCKY

ISSUED: JULY 17, 2006
BY: Vice President
Lexington, Kentucky

EFFECTIVE: AUGUST 1, 2006

ACCESS SERVICE

7. Special Access Service (Cont'd)

7.2 Rate Categories, Applications, and Regulations (Cont'd)

7.2.1 Rate Categories (Cont'd)

(D) Nonrecurring Charge (Cont'd)

(4) Service Rearrangements (Cont'd)

- If the change involves the addition of an optional feature or function which has a separate nonrecurring charge, that nonrecurring charge will apply.

- If the change involves changing the type of signaling on a Voice Grade service, a charge equal to the Voice Grade Circuit Termination rate element nonrecurring charge will apply. The charge will apply per service termination affected.

- For all other changes, including the addition of optional features or functions without a separate nonrecurring charge, a charge equal to a Circuit Termination rate element nonrecurring charge will apply. Only one such charge will apply per service, per change.

(E) Surcharge for Special Access Service

(1) General

Special Access Services provided under this tariff may be subject to the monthly Special Access Surcharge.

(2) Application

The Special Access Surcharge will apply to each intrastate Special Access Service that terminates on an end user's PBX or other device where, through a function of the device, the Special Access Service interconnects to the local exchange network. The Surcharge will apply irrespective of whether the interconnection function is performed in equipment located at the customer's premises or in a Centrex CO-type switch.

The monthly Special Access Surcharge applies to special access facilities on a per voice equivalent basis as shown in the following example:

Special Access Facility	Voice Grade Equivalent		Surcharge		Monthly Charge
Group	12	x	$25	=	$300.00
DS1	24	x	$25	=	$600.00

TARIFF BRANCH
RECEIVED
7/17/2006
PUBLIC SERVICE
COMMISSION
OF KENTUCKY

ISSUED: JULY 17, 2006
BY: Vice President
Lexington, Kentucky

EFFECTIVE: AUGUST 1, 2006

ACCESS SERVICE

7. Special Access Service (Cont'd)

7.2 Rate Categories, Applications, and Regulations (Cont'd)

7.2.1 Rate Categories (Cont'd)

(E) Surcharge for Special Access Service (Cont'd)

In the case of multipoint special access facilities, one Special Access Surcharge will apply for each termination of a special access circuit at an end user's premises.

The Company will bill the customer who orders the special access facility the Special Access Surcharge per installation unless the facility is exempt from the surcharge as set forth in (3) following.

(3) Exemption

The special access facility will be exempt from the monthly surcharge upon receipt of the customer's written certification for the following Special Access Service terminations:

1) an open-end termination in a Company switch of an FX line, including CCSA and CCSA-equivalent ONALs;
2) an analog circuit termination that is used for radio or television program transmission; or
3) a termination used for TELEX service; or
4) a termination that by the nature of its operating characteristics could not make use of Company common lines such as terminations which are restricted through hardware or software; or
5) a termination that interconnects either directly or indirectly to the local exchange network where the usage is subject to Carrier Common Line charges, such as where the special access facility accesses only FGA and no local exchange lines, or special access facility connecting CCSA or CCSA-type equipment (intermachine trunks); or
6) a termination that the customer certifies to the Company is not connected to a PBX or other device capable of interconnecting the special access facility to a local exchange subscriber line.

TARIFF BRANCH
RECEIVED
7/17/2006
PUBLIC SERVICE
COMMISSION
OF KENTUCKY

ISSUED: JULY 17, 2006
BY: Vice President
Lexington, Kentucky

EFFECTIVE: AUGUST 1, 2006

ACCESS SERVICE

7. Special Access Service (Cont'd)

7.2 Rate Categories, Applications, and Regulations (Cont'd)

7.2.1 Rate Categories (Cont'd)

(E) Surcharge for Special Access Service (Cont'd)

(3) Exemption (Cont'd)

Written certification for exemption must include the reason the service is exempted from the surcharge using the categories of exemption as stated above. An ASR may be used for exemption certification, provided all information as required by this section is included. The Company will bill the surcharge to all customers who have not provided valid exemption certification.

The Company will cease billing the Special Access Surcharge when certification that the Special Access facility has become exempt from the surcharge, as set forth preceding, is received. If the status of the special access facility was changed prior to the receipt of the exemption certification, the Company will credit the customer's account, not to exceed ninety days, based on the effective date of the change specified by the customer in the letter of certification.

(4) Rate

	USOC	GSEC	Monthly Rate
Surcharge for Special Access Service			
- Per Voice Grade Equivalent	S25	S25 S25EX	$25.00

TARIFF BRANCH
RECEIVED
7/17/2006
PUBLIC SERVICE COMMISSION OF KENTUCKY

ISSUED: JULY 17, 2006
BY: Vice President
Lexington, Kentucky

EFFECTIVE: AUGUST 1, 2006

ACCESS SERVICE

7. Special Access Service (Cont'd)

7.2 Rate Categories, Applications, and Regulations (Cont'd)

7.2.1 Rate Categories (Cont'd)

(F) Message Station Equipment Recovery Charge

(1) General

The Message Station Equipment Recovery Charge is a charge to recover that portion of message station equipment that is assigned to Special Access Service and is assessed only to those customers to which the Special Access Surcharge applies.

(2) Rate

	USOC	Monthly Rate
Message Station Equipment Recovery Charge		
- Per Special Access Surcharge Assessed	UTM	$0.00

TARIFF BRANCH
RECEIVED
7/17/2006
PUBLIC SERVICE
COMMISSION
OF KENTUCKY

ISSUED: JULY 17, 2006
BY: Vice President
Lexington, Kentucky

EFFECTIVE: AUGUST 1, 2006

ACCESS SERVICE

7. Special Access Service (Cont'd)

7.2 Rate Categories, Applications, and Regulations (Cont'd)

7.2.2 Minimum Periods

The minimum service period for all services except part-time and occasional Video and Program Audio services is one month. The minimum service period for part-time Video and Program Audio Services is one day even though the service will be provided only for the duration of the event specified on the order (e.g., one-half hour, two hours, five hours, etc.).

7.2.3 Application of Daily and Monthly Rates

(A) Daily Rates

Daily rates are recurring rates that apply to each 24 hour period or fraction thereof that a Video or Program Audio Special Access Service provided for part-time or occasional use. For purposes of applying daily rates, the 24 hour period is not limited to a calendar day.

Part-time Program Audio or Video Service ordered on one Access Service Request and provided within a consecutive 30 day period will be charged the daily rate, not to exceed an amount equal to the monthly rate. For each subsequent day or part day, a charge equal to 1/30th of the monthly rate shall apply.

(B) Monthly Rates

Monthly rates are flat recurring rates that apply each month or fraction thereof that a Special Access Service is provided. For billing purposes, each month is considered to have 30 days.

TARIFF BRANCH
RECEIVED
7/17/2006
PUBLIC SERVICE
COMMISSION
OF KENTUCKY

ISSUED: JULY 17, 2006
BY: Vice President
Lexington, Kentucky

EFFECTIVE: AUGUST 1, 2006

ACCESS SERVICE

7. Special Access Service (Cont'd)

7.2 Rate Categories, Applications, and Regulations (Cont'd)

7.2.4 Facility Hubs and Multiplexing

A customer has the option of ordering Voice Grade facilities or High Capacity facilities (i.e., Group, Supergroup, Mastergroup, DS1, DS1C, DS2, DS3, or DS4) to a facility hub for multiplexing to individual services of a lower capacity or bandwidth (e.g., Telegraph, Voice, Program Audio, etc.). Additionally, the customer may specify optional features for the individual circuits derived from the facility to further tailor the circuit to meet specific communications requirements.

Some of the types of multiplexing available include the following:

- from higher to lower bit rate
- from higher to lower bandwidth
- from digital to voice frequency circuits

A hub is a Company designated wire center at which multiplexing functions are performed.

Different locations may be designated as hubs for different facility capacities, e.g., multiplexing from digital to digital may occur at one location while multiplexing from digital to analog may occur at a different location. When placing an Access Service Request the customer will specify the desired hub. The National Exchange Carrier Association Tariff FCC No. 4 identifies serving wire centers, hub locations and the type of multiplexing functions available.

Point to point services may be provided on circuits of these facilities to a hub. The transmission performance for the point to point service provided between the customer designated premises will be that of the lower capacity or bit rate.

TARIFF BRANCH
RECEIVED
7/17/2006
PUBLIC SERVICE
COMMISSION
OF KENTUCKY

ISSUED: JULY 17, 2006
BY: Vice President
Lexington, Kentucky

EFFECTIVE: AUGUST 1, 2006

ACCESS SERVICE

7. Special Access Service (Cont'd)

7.2 Rate Categories, Applications, and Regulations (Cont'd)

7.2.4 Facility Hubs and Multiplexing (Cont'd)

The Company will commence billing the monthly rate for the facility to the hub on the date specified by the customer on the Access Service Request. The customer will be billed for a High Capacity or Voice Grade Circuit Termination, Circuit Mileage and the multiplexer for the service at the time the facility is installed. Individual services utilizing these facilities may be installed coincident with the installation of the facility to the hub or may be ordered and/or installed at a later date, at the option of the customer. Individual service rates (by service type) will apply for a Circuit Termination and additional Circuit Mileage (as required) for each channelized service. These will be billed to the customer as each individual service is installed.

Cascading multiplexing occurs when a high capacity circuit is demultiplexed to provide circuits with a lesser capacity and one of the lesser capacity circuits is further demultiplexed. When cascading multiplexing is performed at different hubbing locations, Circuit Mileage charges also apply between the hubs.

Although not requiring multiplexing, the Company will designate certain hubs for Video and Program Audio Services. Full-time service will be provided between a customer designated premises and a hub and billed accordingly at the monthly rates set forth in 7.6.5 and 7.7.4 for a Circuit Termination, and Circuit Mileage and Optional Features and Functions as applicable. The customer may order part-time and occasional Program Audio or Video services as needed between the hub and a second customer designated premises. The rate elements required to provide the part-time or occasional service (i.e., Circuit Termination, and Circuit Mileage and Optional Features as applicable) will be billed at daily rates for the duration of the service requested.

TARIFF BRANCH
RECEIVED
7/17/2006
PUBLIC SERVICE
COMMISSION
OF KENTUCKY

ISSUED: JULY 17, 2006
BY: Vice President
Lexington, Kentucky

EFFECTIVE: AUGUST 1, 2006

ACCESS SERVICE

7. Special Access Service (Cont'd)

7.2 Rate Categories, Applications, and Regulations (Cont'd)

7.2.5 Shared Use Analog and Digital High Capacity Services

Monthly charges for a DS1 or DS3 high capacity shared used facility will be apportioned between Switched and Special Access based on the relative proportion of channels used for Switched and Special Access in the following manner.

If the facility is ordered as Special Access, rating as Special Access will continue until such time as a portion of the available capacity is used to provide Switched Access Service. As individual channels are activated for Switched Access, monthly charges will be apportioned between Switched and Special Access based on the number of channels used for Switched Access and the number of remaining channels on the Special Access facility according to the following formula: 1) the total shared use charge is equal to the Monthly Switched Access Charge times the number of channels used for Switched Access divided by 24 for DS1 or 672 for DS3 plus the monthly Special Access Charge times the number of channels remaining for Special Access divided by 24 for DS1 or 672 for DS3.

If the facility is ordered as Switched Access, rating as Switched Access will continue until such time as a portion of the available capacity is used to provide Special Access service. As individual channels are activated for Special Access, monthly charges will be apportioned between Switched and Special Access based on the number of channels used for Special Access and the number of remaining channels on the Switched Access Facility according to the following formula: 1) the total shared use charge is equal to the Monthly Special Access Charge times the number of channels used for Special Access divided by 24 for DS1 or 672 for DS3 plus the monthly Switched Access Charge times the number of channels remaining for Switched Access divided by 24 for DS1 or 672 for DS3.

The monthly switched and special access rate used will be the appropriate rate (Special Access Circuit Termination, Circuit Mileage-Fixed and Per Mile, and/or Multiplexer rates, and Switched Access Entrance Facility, Direct-Trunked Transport and/or Multiplexer rates) for the underlying shared use facility, e.g., if the underlying facility is a special access DS3 service, the corresponding Switched Access DS3 Transport will be used to determine the Switched Access monthly charges.

TARIFF BRANCH
RECEIVED
7/17/2006
PUBLIC SERVICE
COMMISSION
OF KENTUCKY

ISSUED: JULY 17, 2006
BY: Vice President
Lexington, Kentucky

EFFECTIVE: AUGUST 1, 2006

ACCESS SERVICE

7. Special Access Service (Cont'd)

7.3 Metallic Service

7.3.1 Basic Circuit Description

A Metallic circuit is an unconditioned two-wire circuit capable of transmitting low speed varying signals at rates up to 30 baud. Metallic circuits are provided between customer designated premises or between a customer designated premises and a Company hub where bridging functions are performed. Interoffice metallic facilities will be limited in length to a total of five miles per circuit.

7.3.2 Technical Specifications Packages

	Package MT-			
Parameter	C	1	2	3
DC Resistance				
Between Conductors	X	X	X	
Loop Resistance		X		X
Shunt Capacitance	X			X

The technical specifications are delineated in Technical Reference Publication TR-NPL-000336.

7.3.3 Channel Interfaces

Compatible channel interfaces are set forth in 9. following.

7.3.4 Optional Features and Functions

(1) Central Office Bridging Capability

a) Three Premises Bridging - Provision of tip-to-tip and ring-to-ring connection in a central office of a metallic pair to a third customer premises.

(b) Series Bridging of up to 26 customer premises.

The following table shows the technical specifications packages with which the optional features and functions are available.

	Available with Technical Specifications Package MT-			
	C	1	2	3
Three Premises Bridging	X	X		X
Series Bridging		X		X

TARIFF BRANCH
RECEIVED
7/17/2006
PUBLIC SERVICE
COMMISSION
OF KENTUCKY

ISSUED: JULY 17, 2006
BY: Vice President
Lexington, Kentucky

EFFECTIVE: AUGUST 1, 2006

ACCESS SERVICE

7. Special Access Service (Cont'd)

7.3 Metallic Service (Cont'd)

7.3.5 Rates and Charges

		Monthly Rate	Nonrecurring Charge
(A)	Circuit Termination		
	- Per Point of Termination	$34.46	$351.78
	- USOC – TMECS		

		Monthly Rates Fixed	Monthly Rates Per Mile
(B)	Circuit Mileage		
	- USOC - 1L5XX	$41.26	$ 1.20

		Monthly Rate
(C)	Optional Features and Functions	
	Bridging	
	- Per Port	
	- USOC - BCNM3, Three Premises Bridging	$ 4.64
	- BCNMS, Series Bridging	4.64

TARIFF BRANCH
RECEIVED
7/17/2006
PUBLIC SERVICE
COMMISSION
OF KENTUCKY

ISSUED: JULY 17, 2006
BY: Vice President
Lexington, Kentucky

EFFECTIVE: AUGUST 1, 2006

ACCESS SERVICE

7. Special Access Service (Cont'd)

7.4 Telegraph Grade Service

7.4.1 Basic Service Description

A Telegraph Grade circuit is an unconditioned circuit capable of transmitting binary signals at rates of 0-75 baud or 0-50 baud. This circuit is furnished for half-duplex or duplex operation. Telegraph Grade circuits are provided between customer designated premises or between a customer designated premises and a Company hub.

7.4.2 Technical Specifications Packages

Parameter	Package TG-		
	C	1	2
Telegraph Distortion	X	X	X

The technical specifications are delineated in Technical Reference Publication TR-NPL-000336.

7.4.3 Channel Interfaces

Compatible channel interfaces are set forth in 9. following.

7.4.4 Optional Features and Functions

Telegraph Bridging (two-wire and four-wire)

The following table shows the technical specification packages with which the optional features and functions are available.

	Available with Technical Specifications Package TG-		
Telegraph Bridging	C	1	2
	X	X	X

TARIFF BRANCH
RECEIVED
7/17/2006
PUBLIC SERVICE
COMMISSION
OF KENTUCKY

ISSUED: JULY 17, 2006
BY: Vice President
Lexington, Kentucky

EFFECTIVE: AUGUST 1, 2006

ACCESS SERVICE

7. Special Access Service (Cont'd)

7.4 Telegraph Grade Service (Cont'd)

7.4.5 Rates and Charges

		USOC	GSEC	Monthly Rate	Nonrecurring Charge
(A)	Circuit Termination				
	- Per Point of Termination				
	- 2-Wire	TME2X	XW22	$ 34.46	$ 239.01
	- 4-Wire	TME4X	XW24	55.14	239.01

		USOC	GSEC	Monthly Rates Fixed	Monthly Rates Per Mile (GSEC: XWP1)
(B)	Circuit Mileage				
	- Per Point of Termination	1L5XX	XWF1	$41.26	$ 1.20

		USOC	GSEC	Monthly Rate
(C)	Optional Features and Functions			
	Telegraph Bridging			
	- Per Port			
	- 2-Wire	BCNT2	XWB2	$ 4.64
	- 4-Wire	BCNT4	XWB4	4.64

TARIFF BRANCH
RECEIVED
7/17/2006
PUBLIC SERVICE
COMMISSION
OF KENTUCKY

ISSUED: JULY 17, 2006
BY: Vice President
Lexington, Kentucky

EFFECTIVE: AUGUST 1, 2006

ACCESS SERVICE

7. Special Access Service (Cont'd)

7.5 Voice Grade Service

7.5.1 Basic Circuit Description

A Voice Grade Circuit is a circuit which provides voice frequency transmission capability in the nominal frequency range of 300 to 3000 Hz and may be terminated two-wire or four-wire. Effective 2-wire and 4-wire circuits are available as an Optional Feature and Function. Voice Grade circuits are provided between customer designated premises or between customer designated premises or between a customer designated premises and a Company hub.

Voice Grade Service may be ordered in conjunction with Switched Access services as set forth in Section 6.3.2 preceding to provide access for a customer's communications service (e.g., WATS, 800, 877, 888, or WATS-type service). When the customer orders the Switched Access Interface, Voice Grade Circuits provide voice frequency transmission capability between an end user premises and Company offices capable of combining Special and Switched Access services or between an end user premises and a WATS Serving Office (WSO). All applicable Special Access rates and charges apply (including Optional Features and Functions charges). Technical Specifications and Optional Features and Functions available with this arrangement are indicated under Package VG-CA in 7.5.4 following.

These rates apply to interLATA WATS Service only. Rates and charges associated with intraLATA and intraLATA/interLATA combination WATS Service are outlines in Section 19 of Kentucky Windstream East, Inc., - London P.S.C. KY. No. 9, Kentucky, General Exchange Tariff.

TARIFF BRANCH
RECEIVED
7/17/2006
PUBLIC SERVICE
COMMISSION
OF KENTUCKY

ISSUED: JULY 17, 2006
BY: Vice President
Lexington, Kentucky

EFFECTIVE: AUGUST 1, 2006

ACCESS SERVICE

7. Special Access Service (Cont'd)

7.5 Voice Grade Service (Cont'd)

7.5.2 Technical Specifications Packages

	Package VG-													
Parameter	C*	1	2	3	4	5	6	7	8	9	10	11	12	CA
Attenuation Distortion	X	X	X	X	X	X	X	X	X	X	X	X	X	X
C-Message Noise	X	X	X	X	X	X	X	X	X	X	X	X	X	X
Echo Control	X	X	X	X		X		X	X			X	X	X
Envelope Delay Distortion	X						X	X	X	X	X	X	X	X
Frequency Shift	X						X	X	X	X	X	X	X	X
Impulse Noise	X					X	X	X	X	X	X	X	X	X
Intermodulation Distortion	X						X	X	X	X	X	X		X
Loss Deviation	X	X	X	X	X	X	X	X	X	X	X	X	X	X
Phase Hits, Gain Hits, and Dropouts	X													
Phase Jitter	X						X	X	X	X	X	X	X	X
Return Loss														X
Signal-to-C Message Noise					X									
Signal-to-C Notch Noise	X					X	X	X	X	X	X	X	X	X

The technical specifications for these parameters (except for dropouts, gain hits, and phase hits) are delineated in Technical Reference TR-NPL-000335 and associated Addendum. The technical specifications for dropouts, phase hits, and gain hits are delineated in Technical Reference PUB 41004, Table 4.

* The desired parameters are selected by the customer from the list of available parameters.

TARIFF BRANCH
RECEIVED
7/17/2006
PUBLIC SERVICE
COMMISSION
OF KENTUCKY

ISSUED: JULY 17, 2006
BY: Vice President
Lexington, Kentucky

EFFECTIVE: AUGUST 1, 2006

ACCESS SERVICE

7. Special Access Service (Cont'd)

7.5 Voice Grade Service (Cont'd)

7.5.3 Channel Interfaces

The following channel interfaces for Voice Grade service do not require signaling capability: AH, DA, DB, DD, DE, DS, NO, PR and TF.

The following channel interfaces for Voice Grade service require signaling capability: AB, AC, CT, DX, DY, EA, EB, EC, EX, GO, GS, LA, LB, LC, LO, LR, LS, RV, and SF.

Compatible channel interfaces are set forth in 9. following.

7.5.4 Optional Features and Functions

(1) Central Office Bridging Capability

(a) Voice Bridging (two-wire or four-wire)

(b) Data Bridging (two-wire or four-wire)

(c) Telephoto Bridging (two-wire and four-wire)

(d) Dataphone Select-A-Station Bridging with sequential arrangement ports or addressable arrangement ports

(e) Telemetry and Alarm Bridging, Split Band-Active Bridging, Passive Bridging, Summation-Active Bridging

(2) Central Office Multiplexing

Voice to Telegraph Grade: An arrangement that converts a Voice Grade circuit to Telegraph Grade circuits using frequency division multiplexing.

(3) Conditioning

Conditioning provides more specific transmission characteristics for Voice Grade services. For two-point services, the parameters apply to each service. For multipoint services, the parameters apply to each mid link or end link. C-Type conditioning and Data Capability may be combined on the same service.

TARIFF BRANCH
RECEIVED
7/17/2006
PUBLIC SERVICE
COMMISSION
OF KENTUCKY

ISSUED: JULY 17, 2006
BY: Vice President
Lexington, Kentucky

EFFECTIVE: AUGUST 1, 2006

ACCESS SERVICE

7. Special Access Service (Cont'd)

7.5 Voice Grade Service (Cont'd)

7.5.4 Optional Features and Functions (Cont'd)

(3) Conditioning (Cont'd)

(a) C-Type Conditioning

C-Type Conditioning is provided for the additional control of attenuation distortion and envelope delay distortion on data services. The attenuation distortion and envelope delay distortion specifications for C-Type Conditioning are delineated in Technical Reference Publication TR-NPL-000335.

(b) Improved C-Type Conditioning

Improved C-Type Conditioning options are provided in conjunction with C-Type Conditioning at the rates set forth in Section 7.5.5 following. The C-Type Conditioning rate shall apply only once regardless if one or both of the following Improved Options are ordered.

(i) Improved Attenuation Distortion

Improved Attenuation Distortion upgrades the frequency versus loss limits of the channel. The technical specifications for Improved Attenuation Distortion are delineated in Technical Reference TR-NPL-000335. This option is provided in conjunction with C-Type conditioning.

(ii) Improved Envelope Delay Distortion

Improved Envelope Delay Distortion upgrades the frequency versus delay response limits of the channel. The technical specifications for Improved Envelope Delay Distortion are delineated in Technical Reference Publication TR-NPL-000335. This option is provided in conjunction with C-Type conditioning.

(c) Sealing Current

Sealing Current Conditioning is provided to help maintain continuity on dry metallic loops. It is usually associated with four-wire DA or NO type channel interfaces.

TARIFF BRANCH
RECEIVED
7/17/2006
PUBLIC SERVICE
COMMISSION
OF KENTUCKY

ISSUED: JULY 17, 2006
BY: Vice President
Lexington, Kentucky

EFFECTIVE: AUGUST 1, 2006

ACCESS SERVICE

7. Special Access Service (Cont'd)

7.5 Voice Grade Service (Cont'd)

7.5.4 Optional Features and Functions (Cont'd)

(4) Customer Specific Premises Receive Level

This option allows the customer to specify the receive level at the Point of Termination. This level must be within a specific range on effective four-wire transmission. The ranges are delineated in Technical Reference Publication TR-NPL-000335.

(5) Improved Return Loss

(a) On Effective Four-Wire Transmission at Four-Wire Point of Termination (applicable to each two-wire port): Provides for a fixed 600 ohm impedance, variable level range and simplex reversal. Company equipment is required at the customer's premises where this option is ordered. The Improved Return Loss parameters are delineated in Technical Reference Publication TR-NPL-000335.

(b) On Effective Four-Wire Transmission at Two-Wire Point of Termination Provides for more stringent Echo Control specifications. In order for this option to be applicable, the transmission path must be four-wire at one POT and two-wire at the other POT. Placement of Company equipment may be required at the customer's premises with the two-wire POT. The Improved Return Loss parameters are delineated in Technical Reference Publication TR-NPL-000335.

TARIFF BRANCH
RECEIVED
7/17/2006
PUBLIC SERVICE
COMMISSION
OF KENTUCKY

ISSUED: JULY 17, 2006
BY: Vice President
Lexington, Kentucky

EFFECTIVE: AUGUST 1, 2006

ACCESS SERVICE

7. Special Access Service (Cont'd)

7.5 Voice Grade Service (Cont'd)

7.5.4 Optional Features and Functions (Cont'd)

(6) Data Capability

Data Capability provides transmission characteristics suitable for data communications. Specifically, Data Capability provides for the control of Signal to C-Notched Noise Ratio and intermodulation distortion. It is available for two-point services or multipoint services.

The Signal to C-Notched Noise Ratio and intermodulation distortion parameter for Data Capability are:

- Signal to C-Notched Noise Ratio is greater than or equal to 32dB Intermodulation distortion
- Signal to second order modulation products (R2) is greater than or equal to 38dB
- Signal to third order modulation products (R3) is greater than or equal to 42 dB

When a service equipped with Data Capability is used for voice communications, the quality of the voice transmission may not be satisfactory.

(7) Telephoto Capability

Telephoto Capability provides transmission characteristics suitable for telephotographic communications. Specifically, Telephoto Capability is provided for the control of attenuation distortion and envelope delay distortion of telephotographic services. The attenuation distortion and envelope distortion parameters for Telephoto Capability are:

Attenuation Distortion (1004Hz Reference)		Envelope Delay Distortion	
Frequency Range (Hz)	Variation (dB)	Frequency Range (Hz)	Variation (mcs)
500-3000	-0.5 to +1.5	1000-2600	110
300-3200	-1.0 to +2.5	800-2800	180

TARIFF BRANCH
RECEIVED
7/17/2006
PUBLIC SERVICE
COMMISSION
OF KENTUCKY

ISSUED: JULY 17, 2006
BY: Vice President
Lexington, Kentucky

EFFECTIVE: AUGUST 1, 2006

ACCESS SERVICE

7. Special Access Service (Cont'd)

7.5 Voice Grade Service (Cont'd)

7.5.4 Optional Features and Functions (Cont'd)

(8) Signaling Capability

Signaling Capability provides for the ability to transmit signals from one customer premises to another customer premises on the same service.

(9) Selective Signaling Arrangement

An arrangement that permits code selective ringing for up to ten codes on a multipoint service.

(10) Transfer Arrangement

An arrangement that affords the customer an additional measure of flexibility in the use of their access circuits. The arrangement can be utilized to transfer a leg of a Special Access Service to another circuit that terminates in either the same or a different customer premises. A key activated or dial-up control service is required to operate the transfer arrangement. A spare circuit, if required, is not included as part of the option.

(11) Four-Wire/Two-Wire Conversions

The term "Effective 2-Wire" denotes a condition which permits the simultaneous transmission in both directions over a channel, but it is not possible to insure independent information transmission in both directions. Effective 2-wire channels may be terminated with 2-wire or 4-wire interfaces.

The term "Effective 4-Wire" denotes a condition which permits the simultaneous independent transmission of information in both directions over a channel. The method of implementing effective 4-wire transmission is at the discretion of the Company (physical, time domain, frequency-domain separation or echo cancellation techniques). Effective 4-wire channels may be terminated with a 2-wire interface at the customer's premises. However, when terminated 2-wire, simultaneous independent transmission cannot be supported because the two wire interface combines the transmission paths into a single path.

When a customer requests that an effective four-wire circuit be terminated with a two-wire circuit interface at the customer designated premises, a four-wire to two-wire conversion is required. The customer will be charged the 4-wire Circuit Termination rate when an effective four-wire is specified in the customer's order. The rate for the conversion is included as part of the basic Circuit Termination rate.

TARIFF BRANCH
RECEIVED
7/17/2006
PUBLIC SERVICE
COMMISSION
OF KENTUCKY

ISSUED: JULY 17, 2006
BY: Vice President
Lexington, Kentucky

EFFECTIVE: AUGUST 1, 2006

ACCESS SERVICE

7. Special Access Service (Cont'd)

7.5 Voice Grade Service (Cont'd)

7.5.4 Optional Features and Functions (Cont'd)

The following table shows the technical specifications packages with which the optional features and functions are available.

	Available with Technical Specifications Package VG-													
	C	1	2	3	4	5	6	7	8	9	10	11	12	CA
C-Type Conditioning	X					X	X	X	X	X	X			
Central Office Bridging Capability	X		X			X	X				X	X	X	
Central Office Multiplexing	X						X							
Customer Specified Premises Receive Level	X		X	X				X	X	X				
Data Capability	X						X	X			X			
Improved Return Loss -For Effective Four-Wire Transmission	X	X	X	X	X	X	X	X	X	X	X	X	X	X
-For Effective Two-Wire Transmission	X		X	X				X						X
Sealing Current Conditioning	X						X							
Selective Signaling Arrangement	X		X			X	X				X	X	X	
Signaling Capability	X	X	X	X				X	X	X				#
Transfer Arrangement	X	X	X	X	X	X	X	X	X	X	X	X	X	

(#) Signaling is provided in conjunction with Switched Access as set forth in 6.3.2(T)(1) preceding.

TARIFF BRANCH
RECEIVED
7/17/2006
PUBLIC SERVICE
COMMISSION
OF KENTUCKY

ISSUED: JULY 17, 2006
BY: Vice President
Lexington, Kentucky

EFFECTIVE: AUGUST 1, 2006

ACCESS SERVICE

7. Special Access Service (Cont'd)

7.5 Voice Grade Service (Cont'd)

7.5.5 Rates and Charges

		USOC	GSEC	Monthly Rate	GSEC	Nonrecurring Charge
(A)	Circuit Termination					
	- Per Point of Termination					
	- 2-Wire	TME2X	EUC2X	$ 34.46	1EUC2X	$246.02
	- 4-Wire	TME2X	EUC4X	55.14	1EUC4X	246.02

		USOC	GSEC	Monthly Rates Fixed	GSEC	Monthly Rates Per Mile
(B)	Circuit Mileage	1L5XX	XZF1	$41.26	1LF2X; 1LF2X MP	$ 1.20

TARIFF BRANCH
RECEIVED
7/17/2006
PUBLIC SERVICE COMMISSION OF KENTUCKY

ISSUED: JULY 17, 2006
BY: Vice President
Lexington, Kentucky

EFFECTIVE: AUGUST 1, 2006

ACCESS SERVICE

7. Special Access Service (Cont'd)

7.5 Voice Grade Service (Cont'd)

7.5.5 Rates and Charges (Cont'd)

C) Optional Features and Functions

Rates and charges for the Optional Features and Functions of Voice Grade Service listed in this section apply as specified below:

1) Bridging

	USOC	GSEC	Monthly Rate	Nonrecurring Charge
a) Voice Bridging				
- Per port				
- Two-Wire	BCNV2	B5NVJ	$ 4.64	None
- Four-Wire	BCNV4	B5NVJ	4.64	None
b) Data Bridging				
- Per Port				
- Two-Wire	BCND2	B5NDJ	4.64	None
- Four-Wire	BCND4	B5NDJ	4.64	None
c) Telephoto Bridging				
- Per port				
- Two-Wire	BCNF2	XZT2	4.64	None
- Four-Wire	BCNF4	XZT4	4.64	None
d) DATAPHONE Select-A-Station Bridging				
Sequential Arrangement Ports				
- Per Circuit Connected				
- 2-Wire	DQ2	XZS2	21.23	None
- 4-Wire	DQ4	XZS4	112.80	None
Addressable Arrangement Ports				
- Per Circuit Connected				
- 2-Wire	KQ2	XZA2	22.76	None
- 4-Wire	KQ4	XZA4	115.88	None

TARIFF BRANCH
RECEIVED
7/17/2006
PUBLIC SERVICE
COMMISSION
OF KENTUCKY

ISSUED: JULY 17, 2006
BY: Vice President
Lexington, Kentucky

EFFECTIVE: AUGUST 1, 2006

ACCESS SERVICE

7. Special Access Service (Cont'd)

7.5 Voice Grade Service (Cont'd)

7.5.5 Rates and Charges (Cont'd)

	USOC	GSEC	Monthly Rate	Nonrecurring Charge
(C) Optional Features and Functions (Cont'd)				
(1) Bridging (Cont'd)				
(e) Telemetry and Alarm Bridging				
Active Bridging Circuit Connections				
- Per Circuit Connected				
- Split Band	CNLRX	CNLRX	$ 8.04	None
- Summation	BCNSA	XZSM	1.37	None
Passive Bridging Circuit Connections				
- Per Circuit Connected	BCNTP	XZPB	0.20	None
(2) Conditioning				
- Per Point of Termination				
(a) C - Type	X1CPT	X1CPT	11.12	None
(b) Improved C-Type Conditioning Options				
- Improved Attenuation Distortion	UHW	UHW	*	None
- Improved Envelope Delay Distortion	UHY	UHY	*	None
(c) Sealing Current	1HBPT	XZSC	None	None
(3) Improved Return Loss for Effective Four-Wire Transmission				
- Per Point of Termination				
- Two-Wire	1RL2W	1RL	16.07	None
- Four-Wire	1RL4W	1RL	16.07	None
(4) Customer Specified Receive Level				
- Per Two-Wire Point of Termination	RLS	-	None	None

* The rate and associated USOC/GSEC for C-Type Conditioning will be applied once in conjunction with the USOC/GSEC associated with the Improved C-Type Conditioning Options regardless if one Improved Option is ordered or both Improved Options are ordered.

TARIFF BRANCH
RECEIVED
7/17/2006
PUBLIC SERVICE
COMMISSION
OF KENTUCKY

ISSUED: JULY 17, 2006
BY: Vice President
Lexington, Kentucky

EFFECTIVE: AUGUST 1, 2006

ACCESS SERVICE

7. Special Access Service (Cont'd)

7.5 Voice Grade Service (Cont'd)

7.5.5 Rates and Charges (Cont'd)

	USOC	GSEC	Monthly Rate	Nonrecurring Charge
(C) Optional Features and Functions (Cont'd)				
(5) Multiplexing Voice to Telegraph Grade - Per Arrangement	MQX	MQX	$216.75	$196.40
(6) Data Capability - Per Point of Termination	XDCPT	XDCPT	11.40	137.52
(7) Telephoto Capability - Per Point of Termination	XTCPT	-	2.81	119.37
(8) Signaling Capability - Per Point of Termination	XSS++	-	16.51	None

- In lieu of ++, substitute appropriate two digit code from following list to specify type of signaling.

USOC	GSEC
AB	XZAB
AC	XZAC
CT	XZCT
DX	XZDX
DY	XZDY
EA	XZEA
EB	XZEB
EC	XZEC
EX	XZEX
GO	XZGO
GS	XZGS
LA	XZLA
LB	XZLB
LC	XZLC
LO	XZLO
LR	XZLR
LS	XZLS
RV	XZRV
SF	XZSF

TARIFF BRANCH
RECEIVED
7/17/2006
PUBLIC SERVICE
COMMISSION
OF KENTUCKY

ISSUED: JULY 17, 2006
BY: Vice President
Lexington, Kentucky

EFFECTIVE: AUGUST 1, 2006

ACCESS SERVICE

7. Special Access Service (Cont'd)

7.5 Voice Grade Service (Cont'd)

7.5.5 Rates and Charges (Cont'd)

	USOC	GSEC	Monthly Rate	Nonrecurring Charge
(C) Optional Features and Functions (Cont'd)				
(9) Selective Signaling Arrangement				
- Per Arrangement	USZ	XZSS	$32.11	None
(10) Transfer Arrangement (Key Activated* or Dial Up**)				
- Per Four Port Arrangement, including control circuit termination***	USY	-	3.00	None
- Per Five Port Arrangement, including control circuit termination***	US5	-	6.85	None

* The key activated control circuit is rated as a Metallic Circuit Termination (use USOC T6EME in lieu of T6ECS) and Circuit Mileage, if applicable (use USOC 1L5MX in lieu of 1L5XX).

** The Dial-up option requires the customer to purchase the Controller Arrangement (USOC XTDDU) from 8.6(A) following.

*** An additional Circuit Termination charge will apply whenever a spare circuit is configured as a leg to the customer's premises. Additional circuit mileage charges will apply when the transfer arrangement is not located in the customer premises serving wire center.

TARIFF BRANCH
RECEIVED
7/17/2006
PUBLIC SERVICE
COMMISSION
OF KENTUCKY

ISSUED: JULY 17, 2006
BY: Vice President
Lexington, Kentucky

EFFECTIVE: AUGUST 1, 2006

ACCESS SERVICE

7. Special Access Service (Cont'd)

7.6 Program Audio Service

7.6.1 Basic Circuit Description

A Program Audio circuit is a circuit measured in Hz for the transmission of a complex signal voltage. The actual bandwidth is a function of the channel interface selected by the customer. The nominal frequency bandwidths are from 50 to 1500 Hz, from 200 to 3500 Hz, from 100 to 5000 Hz or from 50 to 8000 Hz. Only one-way transmission is provided. Program Audio circuits are provided between customer designated premises or between a customer designated premises and a Company hub.

7.6.2 Technical Specifications Packages

	Package AP-				
Parameter	C*	1	2	3	4
Actual Measured Loss	X	X	X	X	X
Amplitude Tracking	X				
Crosstalk	X	X	X	X	X
Distortion Tracking	X				
Gain/Frequency Distortion	X	X	X	X	X
Group Delay	X				
Noise	X	X	X	X	X
Phase Tracking	X				
Short-Term Gain Stability	X				
Short-Term Loss	X				
Total Distortion	X	X	X	X	X

The technical specifications are delineated in Technical Reference PUB 62503 and associated Addendum.

* The desired parameters are selected by the customer from the list of available parameters.

TARIFF BRANCH
RECEIVED
7/17/2006
PUBLIC SERVICE
COMMISSION
OF KENTUCKY

ISSUED: JULY 17, 2006
BY: Vice President
Lexington, Kentucky

EFFECTIVE: AUGUST 1, 2006

ACCESS SERVICE

7. Special Access Service (Cont'd)

7.6 Program Audio Service (Cont'd)

7.6.3 Channel Interfaces

The following channel interfaces (CIs) define the bandwidths that are available for a Program Audio circuit:

CI	Bandwidth
PG-1	Nominal frequency from 50 to 15000 Hz
PG-3	Nominal frequency from 200 to 3500 Hz
PG-5	Nominal frequency from 100 to 5000 Hz
PG-8	Nominal frequency from 50 to 8000 Hz

Compatible channel interfaces are set forth in 9 following.

7.6.4 Optional Features and Functions

(1) Central Office Bridging Capability

Distribution Amplifier

(2) Gain Conditioning

Control of 1004 Hz AML at initiation of service to 0dB ± 0.5 dB.

(3) Stereo

Provision of a pair of gain/phase equalized channels for stereo applications. (Additional AP channel must be ordered separately).

The following table shows the technical specifications packages with which the optional features and functions are available.

	Available with Technical Specifications Package AP-				
	C	1	2	3	4
Central Office Bridging Capability	X	X	X	X	X
Gain Conditioning	X	X	X	X	X
Stereo	X				X

TARIFF BRANCH
RECEIVED
7/17/2006
PUBLIC SERVICE
COMMISSION
OF KENTUCKY

ISSUED: JULY 17, 2006
BY: Vice President
Lexington, Kentucky

EFFECTIVE: AUGUST 1, 2006

ACCESS SERVICE

7. Special Access Service (Cont'd)

7.6 Program Audio Service (Cont'd)

7.6.5 Rates and Charges

	Monthly GSEC	Monthly Rates	Daily GSEC	Daily Rates	Nonrecurring Charge
(A) Circuit Termination					
- Per Point of Termination					
- USOC - TMECS					
200 - 3500 Hz	XXB1	$ 34.46	XXD1	$ 3.45	$ 87.81
100 - 5000 Hz	XXB2	37.89	XXD2	3.79	159.18
50 - 8000 Hz	XXB3	37.89	XXD3	3.79	159.18
50 - 15000 Hz	XXB4	41.32	XXD4	4.13	159.18

	Monthly Rate Fixed	Monthly Rate Per Mile	Daily Rate Fixed	Daily Rate Per Mile
(B) Circuit Mileage				
- USOC - 1L5XX				
200 - 3500 Hz	$ 41.26	$ 1.20	$ 4.13	$ .12
100 - 5000 Hz	45.38	2.41	4.54	.24
50 - 8000 Hz	45.38	3.61	4.54	.36
50 - 15000 Hz	45.38	7.24	4.54	.72

	Monthly Rate GSEC Per Mile	Daily Rate GSEC Per Mile
- GSEC		
200- 3500 HZ	1LFPA35	1L5PA35D
100- 5000 HZ	1LFPA50	1L5PA50D
50- 8000 HZ	1LFPA80	1L5PA80D
50-15000 HZ	1LFPA150	1L5PA150D

TARIFF BRANCH
RECEIVED
7/17/2006
PUBLIC SERVICE
COMMISSION
OF KENTUCKY

ISSUED: JULY 17, 2006
BY: Vice President
Lexington, Kentucky

EFFECTIVE: AUGUST 1, 2006

ACCESS SERVICE

7. Special Access Service (Cont'd)

7.6 Program Audio Service (Cont'd)

7.6.5 Rates and Charges (Cont'd)

(C) Optional Features and Functions

Rates and charges for the Optional Features and Functions of Program Audio Service listed in this section apply as specified below.

		USOC	Monthly Fixed	Daily Rates	Nonrecurring Charges Monthly	Nonrecurring Charges Daily
(1)	Bridging, Distribution Amplifier	(GSEC: BCNPT)	(GSEC: BCNPTD)			
	- Per Port	BCNPT	$19.15	$1.92	None	None
(2)	Gain Conditioning - Per Service	XGC	5.69	.56	$216.53	$216.53
(3)	Stereo - Per service	XSC	None	None	233.16	233.16

TARIFF BRANCH
RECEIVED
7/17/2006
PUBLIC SERVICE
COMMISSION
OF KENTUCKY

ISSUED: JULY 17, 2006
BY: Vice President
Lexington, Kentucky

EFFECTIVE: AUGUST 1, 2006

ACCESS SERVICE

7. Special Access Service (Cont'd)

7.7 Video Service

7.7.1 Basic Circuit Description

A Video circuit is a circuit with one-way transmission capability for a standard 525 line/60 field monochrome, or National Television Systems Committee color video signal and one or two associated 5 or 15 kHz audio signal(s). The bandwidth for a video circuit is either 30 Hz to 4.5 MHz or 30 Hz to 6.6 MHz. The associated audio signal(s) may be either duplexed or provided as one or two separate circuits. The provision and the bandwidth of the associated audio signal(s) is a function of the channel interface selected by the customer. Video circuits are provided between customer designated premises or between a customer designated premises and a Company hub.

7.7.2 Technical Specifications Packages

	Package TV-		
Parameter	C*	1	2
Amplitude vs. Frequency Response	X		
Chrominance/Luminance Inequalities			
Gain	X	X	X
Delay	X	X	X
Chrominance/Luminance Intermodulation	X		
Chrominance Nonlinear Gain	X		
Chrominance Nonlinear Phase	X		
Crosstalk	X		X
Differential Gain	X	X	X
Differential Phase	X	X	X
Dynamic Gain (picture and sync signal)	X		
Field-Time Distortion	X	X	X
Gain/Frequency Distortion	X	X	X
Gain Stability	X	X	X
Insertion Gain	X	X	X
Line-Time Distortion	X	X	X
Long-Time Distortion	X	X	X

* The desired parameters are selected by the customer from the list of available parameters.

TARIFF BRANCH
RECEIVED
7/17/2006
PUBLIC SERVICE
COMMISSION
OF KENTUCKY

ISSUED: JULY 17, 2006
BY: Vice President
Lexington, Kentucky

EFFECTIVE: AUGUST 1, 2006

ACCESS SERVICE

7. Special Access Service (Cont'd)

7.7 Video Service (Cont'd)

7.7.2 Technical Specifications Packages (Cont'd)

Parameter	Package TV- C*	1	2
Luminance Nonlinearity	X		
Luminance Signal/CCIR Weighted Noise	X	X	X
Short-Time Distortion 2 T Pulse	X	X	X
T - Bar Ringing	X	X	X
Signal/15 kHz Flat Weighted Noise	X	X	X
Signal/Low Frequency Noise	X		
Stereo Gain Difference	X	X	
Stereo Phase Difference	X	X	
Total Harmonic Distortion	X	X	X
Transient Sync Signal Non-Linearity	X		
Video/Audio Delay Difference	X		

The technical specifications are delineated in Technical Reference Publication TR-NPL-000338 and associated Addendum.

7.7.3 Channel Interfaces

The following channel interfaces (CIs) define the bandwidth and the provision of the audio signal(s) associated with a Video circuit:

CI	Audio Bandwidth	Provision
2TV6-1	15kHz	1 Channel, duplexed
2TV6-2	15kHz	2 Channels, duplexed
2TV7-1	15kHz	1 Channel, duplexed

* The desired parameters are selected by the customer from the list of available parameters.

TARIFF BRANCH
RECEIVED
7/17/2006
PUBLIC SERVICE
COMMISSION
OF KENTUCKY

ISSUED: JULY 17, 2006
BY: Vice President
Lexington, Kentucky

EFFECTIVE: AUGUST 1, 2006

ACCESS SERVICE

7. Special Access Service (Cont'd)

7.7 Video Service (Cont'd)

7.7.3 Channel Interfaces (Cont'd)

CI	Audio Bandwidth	Provision
2TV7-2	15kHz	2 Channels, duplexed
4TV6-5	5kHz	1 Channel, separate
4TV6-15	15kHz	1 Channel, separate
4TV7-5	5kHz	1 Channel, separate
4TV7-15	15kHz	1 Channel, separate
6TV6-5	5kHz	2 Channels, separate
6TV6-15	15kHz	2 Channels, separate
6TV7-5	5kHz	2 Channels, separate
6TV7-15	15kHz	2 Channels, separate

Compatible channel interfaces are set forth in 9. following.

TARIFF BRANCH
RECEIVED
7/17/2006
PUBLIC SERVICE
COMMISSION
OF KENTUCKY

ISSUED: JULY 17, 2006
BY: Vice President
Lexington, Kentucky

EFFECTIVE: AUGUST 1, 2006

ACCESS SERVICE

7. Special Access Service (Cont'd)

7.7 Video Service (Cont'd)

7.7.4 Rates and Charges

(A) Circuit Termination
- Per Point of Termination

Rates and Charges for the circuit termination rate element of Video Service will be determined on an Individual Case Basis and filed in Section 7.12 following. Available bandwidths and USOC formats are as follows:

Bandwidth	USOC
-TV-1 or 2	TMEV1
-4TV-5	TMEV4
-6TV-5	TMEV6
-TV-15	TMEV5

TARIFF BRANCH
RECEIVED
7/17/2006
PUBLIC SERVICE
COMMISSION
OF KENTUCKY

ISSUED: JULY 17, 2006
BY: Vice President
Lexington, Kentucky

EFFECTIVE: AUGUST 1, 2006

ACCESS SERVICE

7. Special Access Service (Cont'd)

7.7 Video Service (Cont'd)

7.7.4 Rates and Charges (Cont'd)

(B) Circuit Mileage

Rates and Charges for all the circuit mileage rate elements of Video Service will be determined on an Individual Case Basis and filed in Section 7.12 following. Available bandwidths and USOC formats are as follows:

Bandwidth	USOC
TV-1 or 2	1L5XX
4TV-5	1L5XX
6TV-5	1L5XX
TV-15	1L5XX

TARIFF BRANCH
RECEIVED
7/17/2006
PUBLIC SERVICE
COMMISSION
OF KENTUCKY

ISSUED: JULY 17, 2006
BY: Vice President
Lexington, Kentucky

EFFECTIVE: AUGUST 1, 2006

ACCESS SERVICE

7. Special Access Service (Cont'd)

7.8 Wideband Analog Service

7.8.1 Basic Circuit Description

A Wideband Analog circuit is a circuit with a bandwidth measured in kHz for the transmission of a wideband signal. The actual bandwidth is a function of the channel interface selected by the customer. The bandwidths are from 60 to 108 kHz (Group), from 312 to 552 kHz (Supergroup), from 564 to 3084 kHz (Mastergroup), from 300 Hz to 18 kHz, from 29 to 44 kHz or from 28 to 44 kHz. Wideband Analog circuits are provided between customer designated premises or between a customer designated premises and a Company hub.

7.8.2 Technical Specifications Packages

	Package WA-				
Parameter	1	2	2A	3	4
Amplitude Stability	X	X			
Background Noise	X	X	X	X	X
Frequency Shift	X	X	X		
Gain/Frequency Characteristics of:					
- Group Connections	X			X	X
- Supergroup Connections		X			
- Mastergroup Connections			X		
Impulse Noise	X	X	X		
Net Loss Variations	X	X	X	X	X
Pilot Slot	X	X	X		
Spurious Single Frequency Tone	X	X	X		

The technical specifications are delineated in Technical Reference PUB 62505 and associated Addendum.

TARIFF BRANCH
RECEIVED
7/17/2006
PUBLIC SERVICE
COMMISSION
OF KENTUCKY

ISSUED: JULY 17, 2006
BY: Vice President
Lexington, Kentucky

EFFECTIVE: AUGUST 1, 2006

ACCESS SERVICE

7. Special Access Service (Cont'd)

7.8 Wideband Analog Service (Cont'd)

7.8.3 Channel Interfaces

The following channel interfaces (CIs) define the bandwidths that are available for a Wideband Analog channel:

CI	Bandwidth
AH-B	60 kHz to 108 kHz (Group)
AH-C	312 kHz to 552 (Supergroup)
AD-D	564 kHz to 3084 kHz (Mastergroup)
WD-1	300 Hz to 10 kHz
WD-2	29 kHz to 44 kHz
WD-3	28 kHz to 44 kHz

Compatible channel interfaces are set forth in 9. following.

7.8.4 Optional Features and Functions

(A) Central Office Multiplexing

(1) Mastergroup to Supergroup

An arrangement that converts a Mastergroup circuit to ten Supergroup circuits using frequency division multiplexing.

(2) Supergroup to Group

An arrangement that converts a Supergroup circuit to five Group circuits using frequency division multiplexing.

(3) Group to Voice

An arrangement that converts a Group circuit to twelve Voice Grade circuits using frequency division multiplexing.

TARIFF BRANCH
RECEIVED
7/17/2006
PUBLIC SERVICE
COMMISSION
OF KENTUCKY

ISSUED: JULY 17, 2006
BY: Vice President
Lexington, Kentucky

EFFECTIVE: AUGUST 1, 2006

ACCESS SERVICE

7. Special Access Service (Cont'd)

7.8 Wideband Analog Service (Cont'd)

7.8.4 Optional Features and Functions (Cont'd)

(A) Central Office Multiplexing (Cont'd)

(4) Group to DS1

An arrangement that converts two Group circuit to DS1 circuit using analog to digital conversion.

The following table shows that technical specifications packages with which the optional features and functions are available.

	Available with Technical Specifications Package WA-				
	1	2	2A	3	4
Central Office Multiplexing:					
Mastergroup to Supergroup			X		
Supergroup to Group		X			
Group to Voice	X				
Group to DS1*					

* Requires two 60-108 kHz Circuit Terminations and Circuit Mileage, one 1.544 Mbps Circuit Mileage and either a 1.544 Circuit Termination or a DS1 to Voice Multiplexing optional feature, depending on whether the service terminates at a customer's premises or was purchased as a facility to a hub for multiplexing to Voice Grade.

TARIFF BRANCH
RECEIVED
7/17/2006
PUBLIC SERVICE
COMMISSION
OF KENTUCKY

ISSUED: JULY 17, 2006
BY: Vice President
Lexington, Kentucky

EFFECTIVE: AUGUST 1, 2006

ACCESS SERVICE

7. Special Access Service (Cont'd)

7.8 Wideband Analog Service (Cont'd)

7.8.5 Rates and Charges

(A) Circuit Termination
- Per Point of Termination

Monthly Rates and Nonrecurring Charges for the circuit termination rate element of Wideband Analog Service will be determined on an Individual Case Basis and filed in Section 7.12 following.

Available frequency bandwidths and USOC formats are as follows.

Frequency Bandwidths	USOC
60 kHz - 108 kHz	TWT++
312 kHz - 552 kHz	TWT++
564 kHz - 3084 kHz	TWT++
300 Hz - 18 kHz	TWT++
29 kHz - 44 kHz	TWT++

TARIFF BRANCH
RECEIVED
7/17/2006
PUBLIC SERVICE
COMMISSION
OF KENTUCKY

ISSUED: JULY 17, 2006
BY: Vice President
Lexington, Kentucky

EFFECTIVE: AUGUST 1, 2006

ACCESS SERVICE

7. Special Access Service (Cont'd)

7.8 Wideband Analog Service (Cont'd)

7.8.5 Rates and Charges (Cont'd)

(B) Circuit Mileage

Fixed and Per Mile Monthly Rates for the circuit mileage rate element of Wideband Analog Service will be determined on an Individual Case Basis and filed in Section 7.12 following.

Available bandwidths and USOC formats are as follows.

Frequency Bandwidths	USOC
60-108 kHz	1LO++
312-552 kHz	1LO++
564-3084 kHz	1LO++
300 Hz- 18 kHz	1LO++
29-44 kHz	1LO++

TARIFF BRANCH
RECEIVED
7/17/2006
PUBLIC SERVICE
COMMISSION
OF KENTUCKY

ISSUED: JULY 17, 2006
BY: Vice President
Lexington, Kentucky

EFFECTIVE: AUGUST 1, 2006

ACCESS SERVICE

7. Special Access Service (Cont'd)

7.8 Wideband Analog Service (Cont'd)

7.8.5 Rates and Charges (Cont'd)

(C) Optional Features and Functions

(1) Multiplexing

Fixed and Per Mile Monthly Rates for the multiplexing rate element of Wideband Analog Service will be determined on an Individual Case Basis and filed in Section 7.12 following.

Available multiplexing arrangements and USOC formats are as follows:

Multiplexing Arrangement	USOC (Per Arrangement)
Mastergroup to Supergroup	MQ9++
Supergroup to Group	MQS++
Group to Voice	MQV++
Group to DS1*	MQG++

*Requires two 60-108 kHz Circuit Terminations and Circuit Mileage, one 1.544 Mbps Circuit Mileage and either a 1.544 Circuit Termination or a DS1 to Voice Multiplexing optional feature, depending on whether the service terminates at a customers premises or was purchased as a facility to a Company hub for multiplexing to Voice Grade.

TARIFF BRANCH
RECEIVED
7/17/2006
PUBLIC SERVICE
COMMISSION
OF KENTUCKY

ISSUED: JULY 17, 2006
BY: Vice President
Lexington, Kentucky

EFFECTIVE: AUGUST 1, 2006

ACCESS SERVICE

7. Special Access Service (Cont'd)

7.9 Wideband Data Service

7.9.1 Basic Circuit Description

A Wideband Data circuit is an analog circuit for the transmission of synchronous serial data at the rate of 19.2, 50.0, or 230.4 kbps or of asynchronous serial data at rates of up to 19.2, 50.0, or 230.4 kbps. Optional arrangements are available for transmission of synchronous serial data at 18.75 or 40.8 kbps. The actual bit rate is a function of the channel interface selected by the customer. This service requires a 303 Data Station(s). The 303 Data Station provides coupling between the customers business machine and the wideband data transmission medium. A voice band coordinating channel is also provided. Wideband Data circuits are provided between customer designated premises.

7.9.2 Technical Specifications Packages

	Package WD-		
Parameter	1	2	3
Error-Free Seconds	X	X	X

While in service, the monthly average of error-free seconds will be equal to or greater than 98.75%.

7.9.3 Channel Interfaces

The following channel interfaces (CIs) define that bit rates that are available for a Wideband Data circuit:

CI	Bit Rate
WB-18S	18.75 kbps, synchronous
WB-19A	up to 19.2 kbps, synchronous
WB-19S	19.2 kbps, synchronous
WB-23A	up to 230.4 kbps, asynchronous
WB-23S	230.4 kbps, synchronous
WB-40S	40.8 kbps, synchronous
WB-50A	up to 50.0 kbps, asynchronous
WB-50S	50.0 kbps, synchronous

Compatible channel interfaces are set forth in 9. following.

TARIFF BRANCH
RECEIVED
7/17/2006
PUBLIC SERVICE
COMMISSION
OF KENTUCKY

ISSUED: JULY 17, 2006
BY: Vice President
Lexington, Kentucky

EFFECTIVE: AUGUST 1, 2006

ACCESS SERVICE

7. Special Access Service (Cont'd)

7.9 Wideband Data Service (Cont'd)

7.9.4 Optional Features and Functions

(A) Key Activated Transfer Arrangement

An arrangement that affords the customer an additional measure of flexibility in the use of their access circuit(s). The arrangement can be utilized to transfer a leg of a Special Access Service to either a spare or working circuit that terminates in either the same or different customer premises. A key activated control service is required to operate the transfer arrangement. A spare circuit, if required, is not included as a part of the option.

The following table shows the technical specifications packages with which the optional features and functions are available.

	Available with Technical Specifications Package WD-		
	1	2	3
Key Activated Transfer Arrangement	X	X	X

TARIFF BRANCH
RECEIVED
7/17/2006
PUBLIC SERVICE
COMMISSION
OF KENTUCKY

ISSUED: JULY 17, 2006
BY: Vice President
Lexington, Kentucky

EFFECTIVE: AUGUST 1, 2006

ACCESS SERVICE

7. Special Access Service (Cont'd)

7.9 Wideband Data Service (Cont'd)

7.9.5 Rates and Changes

		Monthly Rate	Nonrecurring Charge
(A)	Circuit Termination - Per Point of Termination - USOC – TMECS 50.0 or 40.8 kbps	$750.75	$460.20

	Monthly Rates Fixed	Monthly Rates Per Mile
Circuit Mileage - USDC - 1L5XX	$ 53.63	$ 19.91

For data speeds other than 40.8 and 50.0 kbps:

Fixed and Per Mile Monthly Rates for the Circuit Termination rate element of Wideband Data Service for all jurisdictions will be determined on an Individual Case Basis and filed in Section 7.12 following.

Available data speeds and USOC formats are as follows:

Data Speed	USOC
18.75 kbps	1LOXX
19.2 kbps	1LOXX
230.4 kbps	1LOXX

TARIFF BRANCH
RECEIVED
7/17/2006
PUBLIC SERVICE
COMMISSION
OF KENTUCKY

ISSUED: JULY 17, 2006
BY: Vice President
Lexington, Kentucky

EFFECTIVE: AUGUST 1, 2006

ACCESS SERVICE

7. Special Access Service (Cont'd)

7.9 Wideband Data Service (Cont'd)

7.9.5 Rates and Changes (Cont'd)

(C) Optional Features and Functions

Monthly Rates and Nonrecurring Charges for Optional Features and Functions of Wideband Data Service will be determined on an Individual Case Basis and filed in Section 7.12 following.

Available Optional Features and Functions and USOC formats are as follows.

Optional Features and Functions	USOC
Key Activated Transfer Arrangement	
- Per Four Port Arrangement, including control circuit termination*	UTK++

303 Data Station

(D) Monthly Rates and Nonrecurring Charges for the 303 Data Station rate element of Wideband Data Service will be determined on an Individual Case Basis and filed in Section 7.12 following.

303 Data Station	USOC
- Per Point of Termination	TDQ++

*The key activated control circuit is rated as a Metallic Circuit Termination (use USOC TMEME in lieu of TMECS) and Circuit Mileage, if applicable (use USOC 1L5MX in lieu in 1L5XX).

TARIFF BRANCH
RECEIVED
7/17/2006
PUBLIC SERVICE
COMMISSION
OF KENTUCKY

ISSUED: JULY 17, 2006
BY: Vice President
Lexington, Kentucky

EFFECTIVE: AUGUST 1, 2006

ACCESS SERVICE

7. Special Access Service (Cont'd)

7.10 Digital Data Service

7.10.1 Basic Circuit Description

A Digital Data circuit is a circuit for duplex four-wire transmission of synchronous serial data at the rate of 2.4, 4.8, 9.6, 19.2 or 56 Kbps. The actual bit rate is a function of the channel interface selected by the customer. The circuit provides a synchronous service with timing provided by the Company through the Company's facilities to the customer in the received bit stream. Digital Data circuits are only available via Company designated hubs and are provided between customer designated premises or between a customer designated premises and a Company hub.

The customer may provide the Channel Service Unit-type equipment or other Network Channel Terminating Equipment associated with the Digital Data circuit at the customer premises. The interim program for interconnection of such equipment is set forth in Technical Reference PUB AS No. 1.

7.10.2 Technical Specifications Packages

	Package DA			
Parameter	1	2	3	4
Error-Free Seconds	X	X	X	X

The Company will provide a circuit capable of meeting a monthly average performance equal to or greater than 99.875% error-free seconds while the circuit is in service, if it is measured through a CSU equivalent which is designed, manufactured, and maintained to conform with the specifications contained in Technical Reference PUB 62310.

Voltages which are compatible with Digital Data Service are delineated in Technical Reference PUB 62507.

TARIFF BRANCH
RECEIVED
7/17/2006
PUBLIC SERVICE
COMMISSION
OF KENTUCKY

ISSUED: JULY 17, 2006
BY: Vice President
Lexington, Kentucky

EFFECTIVE: AUGUST 1, 2006

ACCESS SERVICE

7. Special Access Service (Cont'd)

7.10 Digital Data Service (Cont'd)

7.10.3 Channel Interfaces

The following channel interfaces (CIs) define the bit rates that are available for a Digital Data circuit.

CI	Bit Rate
DU-24	2.4 Kbps
DU-48	4.8 Kbps
DU-96	9.6 Kbps
DU-56	56.0 Kbps

Compatible channel interfaces are set forth in 9. following.

7.10.4 Optional Features and Functions

(1) Central Office Bridging Capability

(2) Transfer Arrangement

An arrangement that affords the customer an additional measure of protection and/or flexibility in the use of their access circuit(s) on a 1xN basis. The arrangement can be utilized to transfer a leg of a Special Access Service to either a spare or working circuit that terminates in either the same or a different customer designated hub. A key activated or dial-up control service is required to operate the transfer arrangement. A spare circuit, if required, is not included as a part of the option.

TARIFF BRANCH
RECEIVED
7/17/2006
PUBLIC SERVICE
COMMISSION
OF KENTUCKY

ISSUED: JULY 17, 2006
BY: Vice President
Lexington, Kentucky

EFFECTIVE: AUGUST 1, 2006

ACCESS SERVICE

7. Special Access Service (Cont'd)

7.10 Digital Data Service (Cont'd)

7.10.5 Rates and Charges

	USOC	Monthly GSEC	Monthly Rate	Nonrecurring GSEC	Nonrecurring Charge
(A) Circuit Termination - Per Point of Termination					
2.4, 4.8, or 9.6 Kbps	TMECS	EUCXX	$82.66	1EUCXX	$309.12
19.2, 56.0, or 64 Kbps	TMECS	EUCXX56	89.54	1EUCXX56	$413.35

	USOC	GSEC	Monthly Rates Fixed	Monthly Rates GSEC	Monthly Rates Per Mile
(B) Circuit Mileage					
- 2.4, 4.8 or 9.6 Kbps	1L5XX	XY11	$41.26	1LFSXDDS; 1LFSXDSS MP	$1.20
- 19.2, 56.0, or 64 Kbps	1L5XX	XY41	82.50	1LN5X; 1LN5X MP	2.41

TARIFF BRANCH
RECEIVED
7/17/2006
PUBLIC SERVICE
COMMISSION
OF KENTUCKY

ISSUED: JULY 17, 2006
BY: Vice President
Lexington, Kentucky

EFFECTIVE: AUGUST 1, 2006

ACCESS SERVICE

7. Special Access Service (Cont'd)

7.10 Digital Data Service (Cont'd)

7.10.5 Rates and Charges (Cont'd)

(C) Optional Features and Functions

Monthly Rates and Nonrecurring Charges for the Optional Features and Functions of Digital Data Service listed in this section apply as specified below.

Optional Features and Functions	USOC	GSEC	Monthly Rates	Nonrecurring Charges
(1) Bridging - Per Port	BCNDA	BCNDA	$23.77	None
(2) Loop Transfer Arrangement (Key Activated)* or Dial-Up**) - Per Four-Port Arrangement***	XTD	XYLT	5.96	None

* The key activated control is rated as a Metallic Circuit Termination (Use USOC T6EME in lieu of T6ECS) and Circuit Mileage, if applicable (Use USOC 1L5MX in lieu of 1L5XX).

** The Dial-Up option requires the customer to purchase the Controller Arrangement (USOC XTDDU) from 8.6(A) following.

*** An additional Circuit Termination charge will apply whenever a spare circuit is configured as a leg to the customer's premises. Additional Circuit Mileage charges will also apply when the transfer arrangement is not located in the customer premises serving wire center.

TARIFF BRANCH
RECEIVED
7/17/2006
PUBLIC SERVICE
COMMISSION
OF KENTUCKY

ISSUED: JULY 17, 2006
BY: Vice President
Lexington, Kentucky

EFFECTIVE: AUGUST 1, 2006

ACCESS SERVICE

7. Special Access Service (Cont'd)

7.11 High Capacity Service

7.11.1 Basic Circuit Description

A High Capacity circuit is a circuit for the transmission of nominal 64.0 kbps* or 1.544, 3.152, 6.312, 44.736, or 274.176 Mbps isochronous serial data. The actual bit rate is a function of the channel interface selected by the customer. High Capacity circuits are provided between customer designated premises or between a customer designated premises and a Company hub.

The customer may provide the Network Channel Terminating Equipment associated with the High Capacity circuit at the customer's premises. The interim program for interconnection of such equipment is set forth in Technical Reference PUB AS No. 1.

7.11.2 Technical Specifications Packages

	Package HC					
Parameter	0	1	1C	2	3	4
Error-Free Seconds		X				

A circuit with technical specifications package HC1 will be capable of an error-free second performance of 98.75% over a continuous 24 hour period as measured at the 1.54 Mbps rate through a CSU equivalent which is designed, manufactured, and maintained to conform with the specifications contained in Technical Reference PUB 62411.

* Available only as a circuit of a 1.544 Mbps facility to a Company Digital Data hub or as a cross connect of two 2.4, 4.8, 9.6, 56.0 or 64.0 kbps circuits of two 1.544 Mbps facilities to a Digital Data hub(s). The customer must provide system and channel assignment data.

TARIFF BRANCH
RECEIVED
7/17/2006
PUBLIC SERVICE
COMMISSION
OF KENTUCKY

ISSUED: JULY 17, 2006
BY: Vice President
Lexington, Kentucky

EFFECTIVE: AUGUST 1, 2006

ACCESS SERVICE

7. Special Access Service (Cont'd)

7.11 High Capacity Service (Cont'd)

7.11.3 Channel Interfaces

The following channel interfaces (CIs) define the bit rates that are available for a High Capacity circuit:

CI	Bit Rate
DS-15*	1.544 Mbps (DS1)
DS-27	274.176 Mbps (DS4)
DS-31	3.152 Mbps (DSIC)
DS-44	44.736 Mbps (DS3)
DS-63	6.312 Mbps (DS2)

Compatible channel interfaces are set forth in 9.3.5 following.

7.11.4 Optional Features and Functions

(1) Automatic Loop Transfer

The Automatic Loop Transfer provides protection on a 1xN basis against failure of the facilities between a customer designated premises and the wire center serving that premises. Protection is furnished through the use of a switching arrangement that automatically switches to a spare circuit line when a working line fails. The spare circuit is not included as a part of the option. this option requires compatible equipment at both the serving wire center and the customer premises. The customer is responsible for providing the equipment at its premises. Equipment at the customer premises will be provided under tariff only if it existed in the Company inventory as of November 18, 1983.

(2) Transfer Arrangement

An arrangement that affords the customer an additional measure of flexibility in the use of their access circuit(s). The arrangement can be utilized to transfer a leg of a Special Access Service to either a spare or working circuit that terminates in either the same or a different customer designated premises. A key activated or dial-up control service is required to operate the transfer arrangement. A spare circuit, if required, is not included as a part of the option.

* A 64.0 kbps circuit is available as a circuit(s) of a 1.544 Mbps facility to a Company hub.

TARIFF BRANCH
RECEIVED
7/17/2006
PUBLIC SERVICE
COMMISSION
OF KENTUCKY

ISSUED: JULY 17, 2006
BY: Vice President
Lexington, Kentucky

EFFECTIVE: AUGUST 1, 2006

ACCESS SERVICE

7. Special Access Service (Cont'd)

7.11 High Capacity Service (Cont'd)

7.11.4 Optional Features and Functions (Cont'd)

(3) Central Office Multiplexing

(a) DS4 to DS1

An arrangement that converts a 274.176 Mbps circuit to 168 DS1 circuits using digital time division multiplexing.

(b) DS3 to DS1

An arrangement that converts a 44.736 Mbps circuit to 28 DS1 circuits using digital time division multiplexing.

(c) DS2 to DS1

An arrangement that converts a 6.312 Mbps circuit to four DS1 circuits using digital time division multiplexing.

(d) DS1C to DS1

An arrangement that converts a 3.152 Mbps circuit to two DS1 circuits using digital time division multiplexing.

(e) DS1 to Voice

An arrangement that converts a 1.544 Mbps circuit to 24 circuits for use with Voice Grade Services. A circuit at this DS1 to the hub can also be used for a Digital Data Service.

(f) DS1 to DS0

An arrangement that converts a 1.544 Mbps circuit to 23 64.0 kbps circuits utilizing digital time division multiplexing.

TARIFF BRANCH
RECEIVED
7/17/2006
PUBLIC SERVICE
COMMISSION
OF KENTUCKY

ISSUED: JULY 17, 2006
BY: Vice President
Lexington, Kentucky

EFFECTIVE: AUGUST 1, 2006

ACCESS SERVICE

7. Special Access Service (Cont'd)

7.11 High Capacity Service (Cont'd)

7.11.4 Optional Features and Functions (Cont'd)

(3) Central Office Multiplexing (Cont'd)

(g) DSO to Subrate

An arrangement that converts a 64.0 kbps circuit to subspeeds of up to twenty 2.4 kbps, ten 4.8 kbps, or five 9.6 kbps circuits using digital time division multiplexing.

The following table shows the technical specifications packages with which the optional features and functions are available.

	Available with Technical Specifications Package HC-					
	0	1	1C	2	3	4
Automatic Loop Transfer		X				
Central Office Multiplexing:						
DS4 to DS1						X
DS3 to DS1					X	
DS2 to DS1				X		
DS1C to DS1			X			
DS1 to Voice		X				
DS1 to DSO		X				
DSO to Subrate*	X					
Transfer Arrangement				X		

* Available only on a circuit of a 1.544 Mbps facility to a Company hub

TARIFF BRANCH
RECEIVED
7/17/2006
PUBLIC SERVICE
COMMISSION
OF KENTUCKY

ISSUED: JULY 17, 2006
BY: Vice President
Lexington, Kentucky

EFFECTIVE: AUGUST 1, 2006

ACCESS SERVICE

7. Special Access Service (Cont'd)

7.11 High Capacity Service (Cont'd)

7.11.5 Rates and Charges

	USOC	GSEC	Monthly Rates	GSEC	Nonrecurring Charges
(A) Circuit Termination					
- Per Point of Termination					
1.544 Mbps	TMECS	EUW	$302.50	1EUW	$1,864.91

Frequency bandwidths other than 1.544 mbps:

Monthly Rates and Nonrecurring Charges for the Circuit Termination rate element of High Capacity Service will be determined on an Individual Case Basis and filed in Section 7.12 following.

Available frequency bandwidths and USOC formats are as follows:

Frequency Bandwidths	USOC
64 Kbps	TWT++
3.152 Mbps	TWT++
6.312 Mbps	TWT++
44.736	TWT++
274.176	TWT++

TARIFF BRANCH
RECEIVED
7/17/2006
PUBLIC SERVICE
COMMISSION
OF KENTUCKY

ISSUED: JULY 17, 2006
BY: Vice President
Lexington, Kentucky

EFFECTIVE: AUGUST 1, 2006

ACCESS SERVICE

7. Special Access Service (Cont'd)

7.11 High Capacity Service (Cont'd)

7.11.5 Rates and Charges (Cont'd)

		USOC	GSEC	Monthly Rates	GSEC	Nonrecurring Charges
(B)	Circuit Mileage					
	1.544 Mbps	1L5XX	XC21	$181.51	1LFSXD1 1LFSXD1 MP	$ 18.09

For frequency bandwidths other than 1.544 Mbps:

Fixed and Per Mile Monthly Rates for the Circuit Mileage rate element of High Capacity Service will be determined on an Individual Case Basis and filed in Section 7.12 following.

Available frequency bandwidths and USOC formats are as follows.

Frequency Bandwidths	USOC
64 Kbps	1L5XX (Fixed), 1L5XX (Per Mile)
3.152 Mbps	1LO++
6.312 Mbps	1LO++
44.736	1LO++
274.176	1LO++

TARIFF BRANCH
RECEIVED
7/17/2006
PUBLIC SERVICE
COMMISSION
OF KENTUCKY

ISSUED: JULY 17, 2006 EFFECTIVE: AUGUST 1, 2006
BY: Vice President
Lexington, Kentucky

ACCESS SERVICE

7. Special Access Service (Cont'd)

7.11 High Capacity Service (Cont'd)

7.11.5 Rates and Charges (Cont'd)

(C) Optional Features and Functions

Rates and charges for the Optional Features and Functions of High Capacity Service listed in this section apply as specified below.

	USOC	GSEC	Monthly Rates	GSEC	Nonrecurring Charges
(1) Multiplexing					
DS4 to DS1 - Per arrangement	MXA++	-	ICB	-	None
DS3 to DS1 - Per arrangement	MXB++	MQ3	ICB	-	None
DS2 to DS1 - Per arrangement	MXD++	-	ICB	-	None
DS1C to DS1 - Per arrangement	MXH++	-	ICB	-	None
DS1 to Voice* - Per arrangement	MQ1	MQ1	$195.79	NMQ1	$ 351.85
DS1 to DSO - Per arrangement	QMU	QMU	551.32	-	None
DSO to Subrates - Per arrangement					
Up to 20 2.4 kbps services	QSU24	QSU24	450.88	NQSU24	None
Up to 10 4.8 kbps services	QSU48	QSU48	232.39	NQSU48	155.29
Up to 5 9.6 kbps services	QSU96	QSU96	161.56	NQSU96	294.36

* A circuit of this DS1 to the hub can be used for Digital Data service. ICB rates and charges are filed in 7.12 following.

TARIFF BRANCH
RECEIVED
7/17/2006
PUBLIC SERVICE COMMISSION OF KENTUCKY

ISSUED: JULY 17, 2006
BY: Vice President
Lexington, Kentucky

EFFECTIVE: AUGUST 1, 2006

ACCESS SERVICE

7. Special Access Service (Cont'd)

7.11 High Capacity Service (Cont'd)

7.11.5 Rates and Charges (Cont'd)

(C) Optional Features and Functions (Cont'd)

	USOC	Monthly Rates	Nonrecurring Charges
(2) Automatic Loop Transfer - Per arrangement*	T59	$388.30	None
Transfer Arrangement (key activated** or dial up***) - Per four port arrangement including control channel termination****)	USV	165.00	None

* An additional Circuit Termination charge will apply whenever the spare line is provided as a leg to the customer premises.

** The key activated control circuit is rated as a Metallic Circuit Termination (use USOC 1L5MX in lieu of 1L5XX).

*** The Dial-up option requires the customer to purchase the Controller Arrangement (USOC XTDDU from 8.6(A) following).

**** An additional Circuit Termination charge will apply whenever a spare circuit is configured as a leg to the customers premises. Additional circuit mileage charges will also apply when the transfer arrangement is not located in the customer premises serving wire center.

7.12 Individual Case Filing

Rates and charges for Special Access Service provided on an individual case basis are filed following:

Reserved for future use.

TARIFF BRANCH
RECEIVED
7/17/2006
PUBLIC SERVICE
COMMISSION
OF KENTUCKY

ISSUED: JULY 17, 2006
BY: Vice President
Lexington, Kentucky

EFFECTIVE: AUGUST 1, 2006

ACCESS SERVICE

8. Miscellaneous Services

In this section normally scheduled working hours are an employee's scheduled work period in any given calendar day (e.g., 7:00 a.m. to 4:00 p.m.) for the application of rates based on working hours. Basic Time is that time during normally scheduled working hours. Overtime is that time outside of normally scheduled working hours on scheduled working days. Premium Time is that time outside of normally scheduled working days.

A call-out of a Company employee at a time not consecutive with the employee's scheduled work period is subject to a minimum charge of four hours. Work subject to Premium Time is always subject to a minimum charge of four hours.

8.1 Additional Engineering

Additional Engineering will be provided by the Company at the request of the customer or when the Company determines that Additional Engineering is necessary to accommodate a customer's request.

Additional Engineering is provided when:

A customer requests additional technical information beyond that normally included by the Company on the Design Layout Report (DLR) as set forth in 6.4(F) and 7.1.7.

(A) Additional engineering time is incurred by the Company to engineer a customer's specific written request for a customized service or additional engineering activities which are not normally performed in the provision of services under this tariff.

(B) The Company will notify the customer that Additional Engineering charges, as set forth in 8.1.1 following, will apply before any additional engineering is undertaken. When it is required, the customer will be so notified and will be furnished with a written statement setting forth the justification for the Additional Engineering as well as an estimate of the charges. If the customer agrees to the Additional Engineering, a firm order will be established. If the customer does not want the service or facilities after being notified that Additional Engineering of Company facilities is required, the order will be withdrawn and no charges will apply. Once a firm order has been established, the total charge to the customer for the Additional Engineering may not exceed the estimated amount by more than 10%.

TARIFF BRANCH
RECEIVED
7/17/2006
PUBLIC SERVICE
COMMISSION
OF KENTUCKY

ISSUED: JULY 17, 2006
BY: Vice President
Lexington, Kentucky

EFFECTIVE: AUGUST 1, 2006

ACCESS SERVICE

8. Miscellaneous Services (Cont'd)

8.1 Additional Engineering (Cont'd)

8.1.1 Charges for Additional Engineering

The charges for Additional Engineering are as follows:

	Basic Time USOC: AEH	Overtime USOC: AEH	Premium Time* USOC: AEH
Per Engineer, Per Hour or Fraction Thereof	$45.51	$68.28	$ 91.03

* Subject to a minimum charge of four hours.

TARIFF BRANCH
RECEIVED
7/17/2006
PUBLIC SERVICE
COMMISSION
OF KENTUCKY

ISSUED: JULY 17, 2006
BY: Vice President
Lexington, Kentucky

EFFECTIVE: AUGUST 1, 2006

ACCESS SERVICE

8. Miscellaneous Services (Cont'd)

8.2 Additional Labor

Additional labor is that labor requested and authorized by the customer on a given service and agreed to by the Company as set forth in 8.2.1 through 8.2.5 following. The Company will notify the customer that additional labor charges as set forth in 8.2.6 following will apply before any additional labor is undertaken.

8.2.1 Overtime Installation USOC: ALH

Overtime installation is that Company installation effort performed outside of normally scheduled working hours.

8.2.2 Overtime Repair USOC: ALH

Overtime repair is that Company maintenance effort performed outside of normally scheduled working hours.

8.2.3 Stand by USOC: ALT

Stand by includes all time in excess of one-half (1/2) hour during which Company personnel stand by to make installation acceptance tests or cooperative tests with a customer on a given service.

8.2.4 Maintenance with Other Telephone Companies USOC: ALK

Additional labor charges apply to additional maintenance or repair of facilities which connect to facilities of other telephone companies. This is in addition to the normal efforts required to maintain or repair facilities provided solely by the Company, as set forth in 2.1.1(C).

8.2.5 Other Labor USOC: ALK

Other labor is that additional labor not included in 8.2.1 through 8.2.4 preceding. This includes labor incurred to accommodate a specified customer request that involves only labor which is not covered by any other section of this tariff.

TARIFF BRANCH
RECEIVED
7/17/2006
PUBLIC SERVICE
COMMISSION
OF KENTUCKY

ISSUED: JULY 17, 2006
BY: Vice President
Lexington, Kentucky

EFFECTIVE: AUGUST 1, 2006

ACCESS SERVICE

8. Miscellaneous Services (Cont'd)

8.2 Additional Labor (Cont'd)

8.2.6 Charges for Additional Labor

The charges for additional labor are as follows

Per Technician, Per Hour, or Fraction Thereof

	Basic Time USOC: AEH	Overtime USOC: AEH	Premium Time* USOC: AEH
Per Technician, Per Hour, or Fraction Thereof	$36.03	$54.05	$72.06

* A call-out of a Company employee at a time not consecutive with the employee's scheduled work period is subject to a minimum charge of four hours.

** Subject to a minimum charge of four hours.

TARIFF BRANCH
RECEIVED
7/17/2006
PUBLIC SERVICE COMMISSION OF KENTUCKY

ISSUED: JULY 17, 2006 EFFECTIVE: AUGUST 1, 2006
BY: Vice President
Lexington, Kentucky

ACCESS SERVICE

8. Miscellaneous Services (Cont'd)

8.3 Maintenance of Service

(A) The customer will be responsible for reporting troubles sectionalized to Company facilities and/or equipment. When trouble cannot be clearly sectionalized to the Company facilities and/or equipment, the Company will test cooperatively or independently to assist in trouble sectionalization.

When a customer reports a trouble to the Company for clearance and no trouble is found in the Company's facilities, the customer shall be responsible for payment of a Maintenance of Service charge for the period of time from when Company personnel are dispatched to the customer's end user premises to when the work is completed. Failure of Company personnel to find trouble in Company facilities will result in no charge if the trouble is actually in those facilities, but not discovered at the time.

(B) The customer shall be responsible for payment of a Maintenance of Service charge when the Company dispatches personnel to the customer's premises, and the trouble is in equipment or communications systems provided by other than the Company or in detariffed CPE provided by the Company.

In either (A) or (B) preceding, no credit allowance will be applicable for the interruption involved if the Maintenance of Service Charge applies.

(C) The charge for Maintenance of Service is a follows:

Maintenance of Service Periods	USOC	Per Technician
Per occurrence	MVV	The charges for Maintenance of Service are the same as those set for Additional Labor as set forth in 8.2 preceding.

TARIFF BRANCH
RECEIVED
7/17/2006
PUBLIC SERVICE
COMMISSION
OF KENTUCKY

ISSUED: JULY 17, 2006
BY: Vice President
Lexington, Kentucky

EFFECTIVE: AUGUST 1, 2006

ACCESS SERVICE

8. Miscellaneous Services (Cont'd)

8.4 Additional Testing

Testing Services provides for the use of a Company technician in performing specific tests authorized by the customer including additional testing of facilities which connect to facilities of other telephone companies. Testing Services offered under this section of the tariff are optional and are in addition to acceptance tests and in-service tests performed by the Company as described in 6.4 (G) and 7.1.8 preceding. Testing Services are made subject to the availability of the necessary qualified personnel and test equipment at the requested test locations.

Testing Services consist of Additional Cooperative Acceptance Testing (ACAT) which is performed during installation of Access Services and Nonscheduled Testing (NST) which is performed after acceptance of Access Services by the customer. Rates and charges for Testing Service are set forth in 8.4(C) following.

The Company will provide, upon request, documentation that lists the results of the tests performed. Trunk test failures requiring customer participation for trouble resolution will be provided to the customer on an as-occurs basis.

(A) Additional Cooperative Acceptance Testing

Rates and charges for Additional Cooperative Acceptance Testing of Switched and Special Access Services apply per technician used.

(1) Switched Access Service

Additional Cooperative Acceptance Testing (ACAT) of Switched Access Service is performed at the time of installation and involves the Company provision of a technician at its office(s) and the customer provides a technician at its premises, with suitable test equipment to perform the required tests. The Company may, at the request of the customer, supply a technician at the customer's premises to perform the required tests.

Additional Cooperative Acceptance Testing may, for example, consist of the following tests:

. C-Notched Noise
. Impulse Noise
. Phase Jitter

TARIFF BRANCH
RECEIVED
7/17/2006
PUBLIC SERVICE
COMMISSION
OF KENTUCKY

ISSUED: JULY 17, 2006
BY: Vice President
Lexington, Kentucky

EFFECTIVE: AUGUST 1, 2006

ACCESS SERVICE

8. Miscellaneous Services (Cont'd)

8.4 Additional Testing (Cont'd)

(A) Additional Cooperative Acceptance Testing (Cont'd)

(1) Switched Access Service (Cont'd)

. Signal to C-Notched Noise Ratio
. Intermodulation Distortion (Nonlinear)
. Frequency Shift (Offset)
. Envelope Delay Distortion
. Dial Pulse Percent Break

(2) Special Access Service

When a customer provides a technician at its premises or at an end user's premises, with suitable test equipment to perform the requested tests, the Company may provide a technician at its office for the purpose of conducting Additional Cooperative Acceptance Testing on Voice Grade Services at the time of installation. At the customer's request, the Company may provide a technician at the customer's premises or at the end user premises: These tests may, e.g., consist of the following:

- Attenuation Distortion (i.e., frequency response)
- Intermodulation Distortion (i.e., harmonic distortion)
- Phase Jitter
- Impulse Noise
- Envelope Delay Distortion
- Echo Control
- Frequency Shift

(B) Nonscheduled Testing

Nonscheduled tests are performed by the Company "on demand." When a customer provides a technician at its premises with suitable test equipment to perform the required tests, the Company may provide a technician at its office for the purpose of conducting Nonscheduled Testing of Switched or Special Access services. At the customer's request, the Company may provide a technician at the customer's premises. Nonscheduled tests may consist of any tests, e.g., loss, noise, slope, envelope delay, which the customer may require. Rates and charges for Nonscheduled Testing apply per technician used.

TARIFF BRANCH
RECEIVED
7/17/2006
PUBLIC SERVICE
COMMISSION
OF KENTUCKY

ISSUED: JULY 17, 2006
BY: Vice President
Lexington, Kentucky

EFFECTIVE: AUGUST 1, 2006

ACCESS SERVICE

8. Miscellaneous Services (Cont'd)

8.4 Additional Testing (Cont'd)

(C) Rates and Charges

The charges for Additional Testing are as follows:

	Basic Time USOC: AEH	Overtime USOC: AEH	Premium Time* USOC: AEH
Per Technician, Per Hour, or Fraction Thereof	$36.03	$54.05	$72.06

* A call-out of a Company employee at a time not consecutive with the employee's scheduled work period is subject to a minimum charge of four hours.

** Subject to a minimum charge of four hours.

TARIFF BRANCH
RECEIVED
7/17/2006
PUBLIC SERVICE
COMMISSION
OF KENTUCKY

ISSUED: JULY 17, 2006 EFFECTIVE: AUGUST 1, 2006
BY: Vice President
Lexington, Kentucky

ACCESS SERVICE

8. Miscellaneous Services (Cont'd)

8.5 Balloting and Allocation Process for Equal Access

The Balloting and Allocation Process is an arrangement whereby:

(1) An end user may select or be allocated to an interexchange carrier (IC) to place intrastate, interLATA MTS/MTS-type calls without the 101XXXX access code. This IC is referred to as the end user's interLATA primary interexchange carrier (PIC).

(2) An end user may select or be allocated to an IC or local exchange carrier (LEC) to place intrastate, intraLATA MTS/MTS-type calls without the 101XXXX access code. This IC or LEC is referred to as the end user's intraLATA primary interexchange carrier (IPIC).

Balloting and allocation also applies to agents of Public or Semipublic Pay Telephone service whereby the agent may select or be allocated to an IC to place intrastate interLATA calls without dialing the 10XXX or 101XXXX access code.

In the event that only one IC orders FGD to provide interLATA service or no IC or LEC orders FGD to provide intraLATA service from an end office in accordance with 5.1.2, the Balloting and Allocation Process for the PIC or IPIC set forth below will not apply.

On the effective date(s) of interLATA and intraLATA equal access (i.e., introduction of FGD in a serving end office), end users or agents who have not designated or been allocated to an IC or LEC will continue with the same IC or LEC service arrangement as existed prior to office conversion until the allocation process described in (B) occurs.

(A) End User and Agent Notification and Equal Access Balloting Process

(1) InterLATA Equal Access

End users and agents will be notified of the availability of equal access by means of an equal access ballot. ICs intending to participate in the Balloting Process for each serving end office must inform the Telephone Company in writing no later than 120 days prior to the end office conversion to FGD. The notification from ICs wishing to participate in pay telephone balloting must specify if the carrier will handle 0+ traffic only, both 0+ and 1+ traffic, or 0+ with 1+ traffic being handled by a secondary service provider. When 1+ coin traffic is handled by a secondary service provider, the participating IC must identify the secondary service provider. The initial ballot, the first of two ballots the end user and agent may receive, listing all ICs participating in the balloting process, and an explanation of equal access will be mailed to the end user and agent approximately 90 days prior to the end office conversion to FGD. IC names appearing on the ballot will be listed in a random fashion by end office to ensure that no IC will always appear first on the ballot. The IC listed on a pay telephone ballot will be the 0+ carrier.

TARIFF BRANCH
RECEIVED
7/17/2006
PUBLIC SERVICE
COMMISSION
OF KENTUCKY

ISSUED: JULY 17, 2006
BY: Vice President
Lexington, Kentucky

EFFECTIVE: AUGUST 1, 2006

ACCESS SERVICE

8. Miscellaneous Services (Cont'd)

8.5 Balloting and Allocation Process for Equal Access(Cont'd)

(A) End User and Agent Notification and Equal Access Balloting Process (Cont'd)

(1) InterLATA Equal Access (Cont'd)

Using the initial ballot, which end users and agents will be requested to return within 45 days after receipt, the end user or agent may designate an IC for all of its lines or may choose a different PIC for each of its lines. Where an end user has a multiline hunt group and wants to designate several PICs for this hunt group, special arrangements may be made by contacting the Telephone Company. Customers may designate that they do not want a primary IC by notifying the Telephone Company. This choice is considered a valid selection and the nonrecurring charge as set forth in 8.5(L) will apply to any subsequent change made after the conversion date.

An agent may designate an IC for the 0+ traffic from a pay telephone. The 1+ traffic from the pay telephone may be handled by the selected 0+ carrier if the carrier handles 1+ traffic, by a secondary service provider designated by the 0+ carrier, or by the default carrier if the 0+ carrier has made no arrangements with the Telephone Company to receive 1+ pay telephone traffic.

A second ballot will be sent to an end user or agent who has not designated an IC either by return of the initial ballot or by appearing on an IC customer list. The second ballot will be sent 30 days after conversion of the end office. If the end user or agent does not respond to the second ballot by the requested date, then that end user will be assigned to the allocated IC shown on the second ballot.

(2) IntraLATA Equal Access

When intraLATA and interLATA equal access is made available concurrently, end users will be notified of the availability of equal access by means of an equal access ballot. ICs and LECs intending to participate in the Balloting Process for each serving end office must inform the Telephone Company in writing no later than 120 days prior to the end office conversion to FGD. The initial ballot, the first of two ballots the end user may receive, listing all ICs and LECs participating in the balloting process, and an explanation of equal access will be mailed to the end user approximately 90 days prior to the end office conversion to FGD. IC and LEC names appearing on the ballot will be listed in a random fashion by end office to ensure that no IC or LEC will always appear first on the ballot.

Using the initial ballot, which end users will be requested to return within 45 days after receipt, the end user may designate an IC or LEC for all of its lines or may choose a different IPIC for each of its lines. Where an end user has a multiline hunt group and wants to designate several IPICs for this hunt group, special arrangements may be made by contacting the Telephone Company. Customers may designate that they do not want a primary IC by notifying the Telephone Company. This choice is considered a valid selection and the nonrecurring charge as set forth in 8.5(L) will apply to any subsequent change made after the conversion date.

TARIFF BRANCH
RECEIVED
7/17/2006
PUBLIC SERVICE
COMMISSION
OF KENTUCKY

ISSUED: JULY 17, 2006
BY: Vice President
Lexington, Kentucky

EFFECTIVE: AUGUST 1, 2006

ACCESS SERVICE

8. Miscellaneous Services (Cont'd)

8.5 Balloting and Allocation Process for Equal Access (Cont'd)

(A) End User and Agent Notification and Equal Access Balloting Process (Cont'd)

(2) IntraLATA Equal Access (Cont'd)

A second ballot will be sent to an end user who has not designated an IC or LEC, either by return of the initial ballot or by appearing on an IC or LEC Customer list. The second ballot will be sent 30 days after conversion of the end office. If the end user does not respond to the second ballot by the requested date, then that end user will be assigned to the allocated IC or LEC shown on the second ballot.

When intraLATA equal access is made available in an end office at some time after the end office has converted to interLATA equal access, the Balloting and Allocation process for the intraLATA IPIC will not apply.

(B) Allocation Process

An IC or LEC must notify the Telephone Company of its intent to participate in the allocation process 52 days prior to the end office conversion to equal access. The IC or LEC must also identify whether it will participate in the allocation of business lines, residence lines, or Public/Semipublic Pay Telephones or any combination.

The Telephone Company will tabulate the initial ballots received from the end users and agents described in 8.5(A) and the IC and LEC Customer lists described in 8.5(C). The percentage of end users and agents who have selected a participating IC or LEC will be determined from these ballots and lists. These percentages will be used for the allocation of end users and agents who did not respond to the initial ballot or appear on an IC or LEC list. The percentages used for allocation will be determined approximately five days after end office conversion. A second ballot, indicated in 8.5(A), will be sent to end users and agents who have been allocated to an IC or LEC.

Separate allocation processes will be used for residence, business and Public and Semipublic Pay Telephone lines. The number of end users and agents designating an IC or LEC by returning the initial ballot or appearing on an IC or LEC end user and/or agent list will be totaled. This total will be utilized to compute the percentages used for allocation of residence and business Customers and Public/Semipublic Pay Telephone Customers.

If an IC or LEC participating in the ballot process notifies the Telephone Company that it does not wish to participate in the allocation process, the percentage of Customers allocable to that nonparticipating IC or LEC will be allocated to the remaining ICs and LECs.

TARIFF BRANCH
RECEIVED
7/17/2006
PUBLIC SERVICE
COMMISSION
OF KENTUCKY

ISSUED: JULY 17, 2006 EFFECTIVE: AUGUST 1, 2006
BY: Vice President
Lexington, Kentucky

ACCESS SERVICE

8. Miscellaneous Services (Cont'd)

8.5 Balloting and Allocation Process for Equal Access (Cont'd)

(C) Interexchange Carrier Customer Lists

The Telephone Company will accept IC and LEC Customer lists identifying end users and agents who have made individual arrangements with the IC or LEC to designate the IC or LEC as their primary long distance carrier. The list should be in the form of magnetic tape or paper printout. IC and LEC lists may continue to be received after the initial ballot deadline. All lists must be submitted to the Telephone Company no later than 20 days prior to the end office conversion to be included in the allocation process. If end user and agent ballots are received by the IC or LEC, the end user and agent will be included in the IC or LEC Customer list. The IC or LEC must retain the actual ballots for inspection by the Telephone Company for a period of one year after end office conversion.

(D) End User Choice Discrepancy

An IC or LEC is required to certify at the time it submits end user and/or agent lists to the Telephone Company that it has on file, or has instituted steps designed to obtain signed letters of agency or confirmations of choice from the end user or agent. The IC or LEC is not required to submit letters of agency when submitting end user or agent lists to the Telephone Company, but should maintain the confirmations or letters on file for use in dispute resolution. The IC or LEC should request written confirmation of choice from its Customers no later than the date of submission of its first bill to the Customer.

When an end user or agent indicates more than one PIC or IPIC per line or returns an illegible ballot, the Telephone Company will contact the end user or agent for clarification.

When the Telephone Company identifies a conflict between a ballot and an IC or LEC list, or between lists submitted by two or more ICs and/or LECs, the Telephone Company will notify, within 10 days, all affected ICs and LECs via a conflict report. Those ICs and LECs not involved in any conflicts will receive a zero conflict report from the Telephone Company.

When an end user or agent returns a ballot to the Telephone Company and also appears on a conflicting IC or LEC Customer list, the ballot takes precedence. If an end user or agent appears on two or more IC or LEC Customer lists, the end user or agent will be allocated along with the nonrespondents to the initial ballot. A letter sent with the second ballot will inform the end user or agent that there exists a conflict between two or more ICs and/or LECs and a selection must be made by the deadline of the second ballot, unless the allocated IC or LEC indicated is the end user's or agent's choice.

(E) Balloting and Allocation Procedure for Public and Semipublic Pay Telephones

The balloting and allocation of Public and Semipublic Pay Telephone lines is furnished in accordance with the provisions of the Memorandum of the U.S. District Court for the District of Columbia in United States vs. GTE Corporation (C.A. No. 83-1298), issued December 23, 1988.

TARIFF BRANCH
RECEIVED
7/17/2006
PUBLIC SERVICE
COMMISSION
OF KENTUCKY

ISSUED: JULY 17, 2006
BY: Vice President
Lexington, Kentucky

EFFECTIVE: AUGUST 1, 2006

ACCESS SERVICE

8. Miscellaneous Services (Cont'd)

8.5 Balloting and Allocation Process for Equal Access (Cont'd)

(E) Balloting and Allocation Procedure for Public and Semipublic Pay Telephones (Cont'd)

The balloting and allocation process is a procedure whereby an agent of Public and Semipublic Pay Telephone service may select and designate to the Telephone Company an IC to access, without dialing an access code, for 0+ interLATA calls. This IC is referred to as the agent's primary IC. The 1+ interLATA calls from a pay telephone will be handled by the agent's primary IC if the IC handles 1+ traffic, by a secondary service provider selected by an agent's primary IC, or by the default carrier if the agent's primary IC has made no arrangements for handling 1+ traffic from a pay telephone.

If the agent's primary IC elects not to submit an order for its 1+ interLATA sent-paid traffic or fails to select a secondary service provider to handle its 1+ interLATA calls from the Telephone Company's pay telephones, the 1+ interLATA coin sent-paid traffic will continue to be routed to the existing 1+ default carrier (provided such carrier continues to accept it) until the 0+ carrier notifies the Telephone Company.

The Telephone Company will notify agents of Public and Semipublic Pay Telephones of the availability of equal access through the mailing of an Equal Access Ballot. The mailing of the initial ballots will take place 90 days prior to conversion.

Agents of Public and Semipublic Pay Telephones will be requested to return their respective ballot to the Telephone Company within 45 days from receipt of the ballot.

An IC obtaining service commitments from agents directly, must obtain signed authorization from those agents. The IC will be required to provide that authorization to the Telephone Company within 30 days of the Telephone Company's request for the resolution of disputes.

Agents of Public and Semipublic Pay Telephones who have not made a primary IC selection, either through the Payphone Equal Access Ballot, or directly with an IC, will be sent a second ballot by the Telephone Company 30 days after the conversion date.

The Telephone Company will tabulate the initial ballots received from the agents and the IC Customer lists. The percentage of agents who have selected a participating IC will be determined from these ballots and lists. These percentages will be used for the tentative allocation of agents who did not respond to the initial ballot or appear on an IC list. The percentages used for allocation will be determined approximately five days after end office conversion.

If an IC participating in the ballot process notifies the Telephone Company that it does not wish to participate in the allocation process, the percentage of Customers allocable to that nonparticipating IC will be allocated to the remaining ICs.

TARIFF BRANCH
RECEIVED
7/17/2006
PUBLIC SERVICE
COMMISSION
OF KENTUCKY

ISSUED: JULY 17, 2006
BY: Vice President
Lexington, Kentucky

EFFECTIVE: AUGUST 1, 2006

ACCESS SERVICE

8. Miscellaneous Services (Cont'd)

8.5 Balloting and Allocation Process for Equal Access (Cont'd)

(E) Balloting and Allocation Procedure for Public and Semipublic Pay Telephones (Cont'd)

The Telephone Company will make post conversion changes in a Public and/or Semipublic Pay Telephone agent's PIC assignment pursuant to an IC provided list. Should an agent dispute authorization for an IC submitted change within 90 days of the PIC assignment to the IC, and if the IC cannot produce a letter of agency or confirmation of choice from the agent within 30 days of a request by the Telephone Company to do so, the Telephone Company will place the public or semipublic telephone on the agent's previously selected IC network. The IC will be billed one unauthorized PIC change charge in 8.5(M) for the change to the disputed network and one PIC change charge in 8.5(L) for returning the public or semipublic telephone to its originally selected IC network.

If the IC produces the letter of agency of confirmation of choice within 30 days of the request by the Telephone Company to do so, and if the service of the disputing agent has been switched back to its originally selected IC network, the agent will be billed two PIC change charges in 8.5(L) in lieu of charges to the IC, one for the switch to the IC providing the letter of agency or confirmation of choice and one for the subsequent switch back to the agent's original IC.

(F) PIC and IPIC Charge Application

Initial end user, end user agent and a local service provider that resells services (herein referred to as reseller) selection of a PIC by ballot or appearing on an IC or, for intraLATA service, a LEC list will not incur a charge. A change of PIC selection prior to the end office conversion to interLATA equal access will not incur a charge. A change of IPIC selection prior to the end office conversion to intraLATA equal access will not incur a charge. Notification of a change in a PIC or IPIC may be coordinated by the end user, end user agent or reseller with either the IC or LEC selected or with the Telephone Company, if it is not the selected LEC. Within six months after conversion to equal access, an end user, end user agent or reseller allocated to an IC or LEC may elect to change to another IC or LEC at no charge, on a one-time basis. After the six month period has elapsed, a nonrecurring charge in 8.5(L) will apply to change the PIC or IPIC. The IPIC charge shall apply only when an intraLATA PIC change is made independent of an interLATA PIC. After conversion to equal access, end users, end user agents and resellers who select an IC or LEC by returning the initial ballot will be charged for each change made.

TARIFF BRANCH
RECEIVED
7/17/2006
PUBLIC SERVICE
COMMISSION
OF KENTUCKY

ISSUED: JULY 17, 2006
BY: Vice President
Lexington, Kentucky

EFFECTIVE: AUGUST 1, 2006

ACCESS SERVICE

8. Miscellaneous Services (Cont'd)

8.5 Balloting and Allocation Process for Equal Access (Cont'd)

(F) PIC and IPIC Charge Application (Cont'd)

In end offices converted to Equal Access new end users, end user agents and resellers of Public and Semipublic Pay Telephones and multi-party end users who upgrade to individual lines must presubscribe to the PIC and/or IPIC of their choice at the time an order is placed for service. The IPIC may be an IC or LEC (the Telephone Company or another LEC). Upon the end user, end user agent's or reseller's selection of the PIC and/or IPIC, at the time of placing an order, a confirmation notice will be sent identifying the IC selected as the PIC and/or the IC or LEC selected as the IPIC. From the date of the confirmation notice, he will have 90 days to change his presubscription selection without a charge. If a PIC and/or IPIC is not chosen at the time the order for service is submitted, the end user, end user agent or reseller will be sent a confirmation notice which contains a list of ICs with FGD providing interLATA service and/or a list of ICs and LECs providing intraLATA service, and will be informed that they have 90 days to contact the IC and/or LEC of their choice or the Telephone Company to apply for the PIC or IPIC arrangement. If notice is received by the Telephone Company within 90 days of the in-service date for local service or upgrade, no charge will be billed to the end user, end user agent or reseller. If notice is received after 90 days, the end user, end user agent or reseller will be billed a nonrecurring charge for the PIC or IPIC as in 8.5(L). The IPIC charge shall apply only when an intraLATA PIC change is made independent of an interLATA PIC. Until the end user, end user agent or reseller receives service from the selected carrier, he may access the carrier of his choice by dialing the appropriate 10XXX or 101XXXX carrier identification code.

The Telephone Company will make post conversion changes in the end user's, end user agent's or reseller's PIC or IPIC assignment pursuant to an IC or LEC provided list of Customers, accepted by the Telephone Company under conditions in (C) and (D). Post conversion changes in a PIC assigned to a Public or Semipublic Pay Telephone will be made under the conditions set forth in 8.5(E). Should an end user, end user agent or reseller dispute authorization of the change within 90 days of the PIC or IPIC assignment, and if the carrier cannot produce a letter of agency or confirmation from the end user, end user agent or reseller, the Telephone Company will place the end user on the previous carrier network where possible and the carrier will be billed according to the following options:

TARIFF BRANCH
RECEIVED
7/17/2006
PUBLIC SERVICE
COMMISSION
OF KENTUCKY

ISSUED: JULY 17, 2006 EFFECTIVE: AUGUST 1, 2006
BY: Vice President
Lexington, Kentucky

ACCESS SERVICE

8. Miscellaneous Services (Cont'd)

8.5 Balloting and Allocation Process for Equal Access (Cont'd)

(F) PIC and IPIC Charge Application (Cont'd)

(1) If the IC or LEC has previously submitted a letter requesting the Telephone Company to settle end user disputes without investigation, the carrier will be charged two PIC or IPIC change charges, in 8.5(L). One PIC or IPIC change charge is for the change to the disputed carrier and one is for placing the end user on his previous carrier network or the carrier network of his choice. By virtue of the carrier's letter requesting no investigation, the Telephone Company will perform no investigation and will not accept nor request at a later date any letter of authorization regarding an end user's disputed PIC or IPIC assignment. This option does not apply to Public or Semipublic Pay telephones nor Public Coinless telephone lines. This option also does not relieve the IC or LEC of the conditions set forth in (C) and (D) preceding.

(2) If the IC or LEC does request in writing that end user PIC or IPIC disputes be resolved with investigation as in (1) preceding, the carrier will be billed one Unauthorized PIC or IPIC charge, in 8.5(M), for the change to the disputed carrier and one PIC or IPIC change charge, in 8.5(L), for placing the end user on the carrier network of his choice.

If, under (2) preceding, the carrier produces the letter of agency or confirmation of choice within 30 days of the Telephone Company request, the end user, end user agent or reseller will be billed two PIC or IPIC charges in 8.5(L) in lieu of charges to the carrier. Charges are only applicable if a change in an end user's, end user agent's or reseller's carrier selection has actually been implemented in the switch.

(G) Multi-party End Users

Multi-party end users will continue with the same carrier service arrangement which existed prior to the end office conversion. However, multi-party end users may access the carrier of their choice by dialing the appropriate 10XXX or 101XXXX carrier identification code. In certain suitably equipped end offices, two-party Customers may subscribe to the carrier of their choice.

(H) Cancellation of a Carrier Participation

If an IC or LEC cancels all of its FGD service in the converting end office prior to the conversion date or discontinues all of its FGD service within two years after the introduction of FGD in the converting end office, the carrier is obligated to do the following:

(1) Notify the Telephone Company of the cancellation of their FGD service, and

(2) Contact in writing all end users, end user agents and resellers who have selected, or been allocated to, the canceling carrier as their PIC or IPIC, inform these end users, end user agents and resellers of the cancellation, request the end users, end user agents and resellers to select a new PIC or IPIC, and state that the canceling carrier will pay the nonrecurring charge as set forth in 8.5(L).

TARIFF BRANCH
RECEIVED
7/17/2006
PUBLIC SERVICE
COMMISSION
OF KENTUCKY

ISSUED: JULY 17, 2006
BY: Vice President
Lexington, Kentucky

EFFECTIVE: AUGUST 1, 2006

ACCESS SERVICE

8. Miscellaneous Services (Cont'd)

8.5 Balloting and Allocation Process for Equal Access (Cont'd)

(H) Cancellation of a Carrier Participation (Cont'd)

The Telephone Company will bill the canceling IC or LEC for a period of two years from the discontinuance of FGD service, the nonrecurring charge as set forth in 8.5(L) for each end user, end user agent and reseller this carrier has currently designated to it. Such charge will not apply to the canceling carrier where the canceling IC or LEC transfers or assigns its FGD services and the associated 10XXX or 101XXXX code to another carrier in such manner that the Telephone Company does not change end user, end user agent or reseller records or if another carrier elects to pay nonrecurring charge on behalf of the canceling IC or LEC.

(I) Liability of the Telephone Company

If through the fault of the Telephone Company, the end user, end user agent or reseller is not subscribed to its chosen PIC or IPIC, the nonrecurring charges in 8.5(L) and 8.5(M) do not apply to reassign the end user, end user agent or reseller to his chosen PIC or IPIC.

(J) (Reserved for Future Use)

(K) Carrier Desired Due Date (ICDDD) for PIC or IPIC Installation

An IC or LEC may request a desired due date for PIC or IPIC installation for a specific, single end user, end user agent or reseller acting on behalf of an end user post equal access conversion. This ICDDD is a mutually agreed upon negotiated due date, determined to be between 3 and 45 business days from the date of receipt of the order. The carrier must coordinate the ICDDD with the Telephone Company prior to sending in the first order.

The ICDDD does not apply to routine lists provided by the carrier, as set forth in 8.5(C) and (D). The Nonrecurring Charge for PIC or IPIC as set forth in 8.5(L), applies to each line converted to the carrier requesting ICDDD. The intraLATA PIC charge shall apply only when an intraLATA PIC charge is made independent of an interLATA PIC change. This charge will be billed to the carrier's end user Customer.

(L) Nonrecurring Charge for Primary InterLATA Carrier (PIC) or Primary IntraLATA Carrier (IPIC)

The nonrecurring charge for PIC or IPIC is as follows:

	Nonrecurring Charge	GSEC
Per Telephone Company Local Service Line or Trunk	$ 5.00	NEPS (PIC) NAAPS (IPIC)

(M) The nonrecurring charges for Unauthorized PIC or IPIC changes are as follows:

		Nonrecurring Charge	GSEC
(1)	Per Telephone Company Local Business or Residence Service Line or Trunk	$ 9.04	NEPSUBR (PIC) NAAPSUBR (IPIC)

TARIFF BRANCH
RECEIVED
7/17/2006
PUBLIC SERVICE
COMMISSION
OF KENTUCKY

ISSUED: JULY 17, 2006 EFFECTIVE: AUGUST 1, 2006
BY: Vice President
Lexington, Kentucky

ACCESS SERVICE

8. Miscellaneous Services (Cont'd)

8.5 Balloting and Allocation Process for Equal Access (Cont'd)

(M) (Cont'd)

	Nonrecurring Charge	GSEC
(2) Per Telephone Company Public and Semipublic Pay Telephone and Public Coinless Telephone Lines	$22.45	NEPSUC

8.5.1 End User/Agent Lists

(A) Presubscription List

(1) InterLATA Equal Access

Prior to conversion to equal access (i.e., introduction of FGD in an end office switch) an IC may request a list of the Telephone Company's end users and agents of record served from that end office switch. The Presubscription List will be provided as follows:

(a) The Telephone Company will provide a list from its customer data base. The list may be provided on magnetic tape, electronic transmission or paper printout, at the option of the IC, at rates provided in 8.5.2(A) Foreign listings, PBX stations, CU Centrex stations and numbers not in service will not be provided.

(1) The initial list will be provided to the IC no later than 30 days after receipt of the order and payment by the IC of charges as set forth in 8.5.2(A). The nonrecurring charge for the initial list applies per order. A single order may contain all end offices having the same equal access conversion date. The telephone number will not be provided if an end user or agent has a nonpublished number.

(2) The Account Activity List, which includes a listing of all changes to the customer data base, since the initial list was produced, will be provided on a cyclic basis. The Account Activity List will only include information for those end users and agents that are presubscribed to the IC (including end users and agents with nonpublished numbers) for the sole purpose of updating the IC's customer account information. There is no charge for this list.

(b) The IC agrees to use the Initial and Account Activity Lists for the sole purpose of either contacting potential customers/agents, or existing customers/ agents, regarding interexchange telecommunications services available through equal access to be obtained from the Telephone Company or for the purpose of updating IC customer/agent account information. The IC agrees not to sell, or reproduce in any manner, in whole or in part, the lists or permit such to be done.

TARIFF BRANCH
RECEIVED
7/17/2006
PUBLIC SERVICE
COMMISSION
OF KENTUCKY

ISSUED: JULY 17, 2006
BY: Vice President
Lexington, Kentucky

EFFECTIVE: AUGUST 1, 2006

ACCESS SERVICE

8. Miscellaneous Services (Cont'd)

8.5 Balloting and Allocation Process for Equal Access (Cont'd)

8.5.1 End User/Agent Lists (Cont'd)

(A) Presubscription List (Cont'd)

(1) InterLATA Equal Access (Cont'd)

(c) The IC shall indemnify, protect and save harmless the Telephone Company from and against any and all loss, liability, damages and expense arising out of any demand, claim, suit or judgment for damages which may arise out of the Telephone Company's supplying of listing information, services or records.

(d) The Telephone Company and the IC agree that the mutual objective of the parties is to conduct their respective businesses to avoid confusion by the end users and agents as to the separate and independent identity of the respective companies and their services. Neither the Telephone Company nor the IC shall make any representation to end users, the public, prospective advertisers, expressed or implied, written or oral, which would imply that the IC is the same as, a part of, or associated with the Telephone Company.

(e) This service may be terminated by either the Telephone Company or the IC upon thirty (30) days' written notice. The Telephone Company reserves the right to terminate this service immediately upon written notice if the IC misuses the list information. Performance by the Telephone Company shall be excused in the event of strike, riot, act of God or any other cause beyond the reasonable control of the Telephone Company.

(2) IntraLATA Equal Access

Prior to conversion to intraLATA equal access an IC or LEC may request a list of the Telephone Company's end users of record served from that end office switch. A single Presubscription List will be provided to intraLATA toll providers as follows:

(a) The Telephone Company will provide a list from its Customer data base. The list may be provided on magnetic tape, electronic transmission or paper printout, at the option of the IC or LEC, at rates provided in 8.5.2(A) Foreign listings, PBX stations, CU centrex stations, public coin station and numbers not in service will not be provided.

(1) The Initial List will be provided to the IC or LEC no later than 30 days after receipt of the order and payment by the IC or LEC of charges in 8.5.2(A). The nonrecurring charge for the Initial List applies per order. A single order may contain all end offices having the same intraLATA equal access conversion date. The telephone number will not be provided if an end user has a nonpublished number.

TARIFF BRANCH
RECEIVED
7/17/2006
PUBLIC SERVICE
COMMISSION
OF KENTUCKY

ISSUED: JULY 17, 2006
BY: Vice President
Lexington, Kentucky

EFFECTIVE: AUGUST 1, 2006

ACCESS SERVICE

8. Miscellaneous Services (Cont'd)

8.5 Balloting and Allocation Process for Equal Access (Cont'd)

8.5.1 End User/Agent Lists (Cont'd)

(A) Presubscription List (Cont'd)

(2) IntraLATA Equal Access (Cont'd)

(a) (Cont'd)

(2) The Account Activity List, which includes a listing of all changes to the Customer data base, since the Initial List was produced, will be provided on a cyclic basis. The Account Activity List will only include information for those end users that are presubscribed to the IC or LEC (including end users with nonpublished numbers) for the sole purpose of updating the IC's or LEC's Customer account information. There is no charge for this list.

(b) The IC or LEC agrees to use the Initial List for the sole purpose of contacting potential customers, or existing Customers, regarding intraLATA telecommunications services available through equal access to be obtained from the Telephone Company. The IC or LEC agrees not to sell, or reproduce in any manner, in whole or in part, the lists or permit such to be done.

(c) The IC or LEC shall indemnify, protect and save harmless the Telephone Company from and against any and all loss, liability, damages and expense arising out of any demand, claim, suit or judgment for damages which may arise out of the Telephone Company's supplying of listing information, services or records.

(d) The Telephone Company and the IC or LEC agree that the mutual objective of the parties is to conduct their respective businesses to avoid confusion by the end users as to the separate and independent identity of the respective companies and their services. Neither the Telephone Company nor the IC or LEC shall make any representation to end users, the public, prospective advertisers, expressed or implied, written or oral, which would imply that the IC or LEC is the same as, a part of, or associated with the Telephone Company.

(e) This service may be terminated by either the Telephone Company or the IC or LEC upon thirty (30) days' written notice. The Telephone Company reserves the right to terminate this service immediately upon written notice if the IC or LEC misuses the list information. Performance by the Telephone Company shall be excused in the event of strike, riot, act of God or any other cause beyond the reasonable control of the Telephone Company.

TARIFF BRANCH
RECEIVED
7/17/2006
PUBLIC SERVICE
COMMISSION
OF KENTUCKY

ISSUED: JULY 17, 2006
BY: Vice President
Lexington, Kentucky

EFFECTIVE: AUGUST 1, 2006

ACCESS SERVICE

8. Miscellaneous Services (Cont'd)

8.5 Balloting and Allocation Process for Equal Access (Cont'd)

8.5.1 End User/Agent Lists (Cont'd)

(B) Allocation Lists

(1) The Telephone Company will provide to the IC or LEC, at no charge, a list of end users and agents that have been allocated to the IC or LEC as described in 8.5(B). This list will be provided after the Balloting and Allocation Process occurs.

(2) A list of all end users and agents who have been allocated, in accordance with 8.5(B), will be available to an IC or LEC upon request. Charges in 8.5.2(A) will apply. The nonrecurring charge for the Allocation List applies each time the IC or LEC orders the service. A single order may contain all end offices having the same equal access conversion date.

8.5.2 End User/Agent Lists - Rates and Charges

(A) Initial and Allocation Lists

Initial List Nonrecurring Charge Per ASR USOC - DMT	Per Customer Account* USOC – 2Y6CT	Allocation List Per Listing* USOC - 2Y6CT
$ 50.00	$ .03	$ .03

* For the purpose of the Initial Lists a customer and agent is defined in Section 2.6 preceding. For the purpose of the Allocation list, a listing is defined as an end user or agent record eligible for a Predesignated Interexchange Carrier Selection.

TARIFF BRANCH
RECEIVED
7/17/2006
PUBLIC SERVICE
COMMISSION
OF KENTUCKY

ISSUED: JULY 17, 2006
BY: Vice President
Lexington, Kentucky

EFFECTIVE: AUGUST 1, 2006

ACCESS SERVICE

8. Miscellaneous Services (Cont'd)

8.6 Miscellaneous Equipment

(A) Controller Arrangement

This arrangement enables the customer to control up to 48 transfer functions at a Company central office via a remote keyboard terminal capable of either 300 or 1200 bps operation. Included as part of the Controller Arrangement is a dial-up data station located at the Company Central Office to provide access to the Controller Arrangement. This dial-up data station consists of a 212A DATAPHONE data set and an appropriate Company provided channel.

The Controller Arrangement must be located in the same Company central office as the transfer functions which it controls.

	USOC	Monthly Charge
- Per arrangement	XTDDU	$100.00

8.7 Restoration Priority

The Company will arrange a Special Access Service for Restoration Priority on receipt of certification in conformance with Part 64, Subpart D, Appendix A of the Federal Communications Commission's Rules and Regulations. A charge applies when a request to provide or change a Restoration Priority is received subsequent to the issuance of an Access Order to install the service. No charge applies when a Restoration Priority is discontinued.

	USOC	Nonrecurring Charge
Restoration priority, per service arranged	RSP	$104.02

TARIFF BRANCH
RECEIVED
7/17/2006
PUBLIC SERVICE COMMISSION OF KENTUCKY

ISSUED: JULY 17, 2006
BY: Vice President
Lexington, Kentucky

EFFECTIVE: AUGUST 1, 2006

ACCESS SERVICE

8. Miscellaneous Services (Cont'd)

8.8 Telecommunications Service Priority

8.8.1 General

The Telephone Company will arrange a Telecommunications Service Priority (TSP) installation and service restoration classification on receipt of certification in conformance with Part 64, Subpart D, Appendix A of the Federal Communications Commission's Rules and Regulations.

The TSP System is a service, developed to meet the requirements of the Federal Government, for the priority installation and/or restoration of NSEP telecommunications services. These include both Switched and Special Access Services. The TSP System applies only to NSEP telecommunications services and requires and authorizes priority action by the Telephone Company.

The TSP System shall be provided in accordance with the guidelines set forth in "Telecommunications Service Priority (TSP) System for National Security Emergency Preparedness (NSEP) Service Vendor Handbook" (NCS) H 3-1-2 dated July 9, 1990 and "Telecommunications Security Emergency Preparedness (NSEP) Service User Manual: (NCS) M 3-1-1.

8.8.2 Priority Installation

Expedited order charges, as set forth in Section 5.3.1(D), are applicable to access orders submitted with a TSP installation priority. Access orders requiring the special construction of facilities will be subject to the regulations, rates and charges of GSTC Tariff F.C.C. No. 2, Special Construction.

TARIFF BRANCH
RECEIVED
7/17/2006
PUBLIC SERVICE
COMMISSION
OF KENTUCKY

ISSUED: JULY 17, 2006
BY: Vice President
Lexington, Kentucky

EFFECTIVE: AUGUST 1, 2006

ACCESS SERVICE

8. Miscellaneous Services (Cont'd)

8.8 Telecommunications Service Priority (Cont'd)

8.8.3 Priority Restoration

(A) New orders with priority level assignments will be provisioned in accordance with the guidelines established to TSP. The Telephone Company will not accept orders for new Restoration Priority System (RP) circuits after September 10, 1990. Applications for circuits previously provisioned under RP must be resubmitted for provisioning in accordance with the guidelines established for TSP during the 30-month transition period between September 10, 1990 through March 10, 1993. The Nonrecurring Charge as set forth in 8.8.4(B) will apply to RP orders resubmitted for provisioning under the TSP System. After the transition period, the Telephone Company will discontinue any RP assignments remaining on record.

(B) Under certain conditions it may be necessary to preempt one or more customer services with a lower or no restoration priority in order to install or restore NSEP telecommunications service(s) of a higher priority. If such preemption is necessary, and if circumstances permit, the Telephone Company will make reasonable effort to notify the preempted service customer of the action to be taken.

(C) No additional charge applies to the implementation of a Priority Restoration level submitted concurrent with the initial order to install the Switched or Special Access Service. The nonrecurring charge set forth in 8.8.4(B) following will apply to any request to change or add a Priority Restoration level on an existing Switched or Special Access Service.

TARIFF BRANCH
RECEIVED
7/17/2006
PUBLIC SERVICE
COMMISSION
OF KENTUCKY

ISSUED: JULY 17, 2006
BY: Vice President
Lexington, Kentucky

EFFECTIVE: AUGUST 1, 2006

ACCESS SERVICE

8. Miscellaneous Services (Cont'd)

8.8 Telecommunications Service Priority (Cont'd)

8.8.4 Rates and Charges

The following rates and charges are in addition to all other rates and charges that may be applicable for other services that may be furnished by the provisions of this tariff which operate in conjunction with the TSP System.

(A) Priority Installation of an Access Service.

(1)	Expedited Orders	Regulations, rates and charges are the same as those set forth in 5.3.1(D) preceding for Switched and Special Access Service.
(2)	Utilization of Specially Constructed Facilities.	Regulations, rates and charges are the same as those set forth in GSTC Tariff F.C.C. No. 2, Special Construction of facilities.

(B) Priority Restoration (PR) Level Implementation on an Access Service.

		USOC	Monthly Rates	Nonrecurring Charges
(1)	When the PR level is implemented concurrent with the initial ASR.	None		None
(2)	When the PR level is added or changed on an existing Access Service.	TSP	None	$104.02

TARIFF BRANCH
RECEIVED
7/17/2006
PUBLIC SERVICE
COMMISSION
OF KENTUCKY

ISSUED: JULY 17, 2006
BY: Vice President
Lexington, Kentucky

EFFECTIVE: AUGUST 1, 2006

ACCESS SERVICE

8. Miscellaneous Services (Cont'd)

8.9 Billing Name and Address Service (BNAS)

The Telephone Company will, upon request, provide Billing Name and Address Services (BNAS) to a Telecommunications Service Provider (customer), or its authorized billing and collection agent. Telecommunications Service Providers include interexchange carriers, operator service providers, enhanced service providers, and any other provider of intrastate telecommunications services. There are three BNAS offerings available pursuant to this tariff, Per Call/Periodic BNA, Data Gathering Service (DGS), and End User Validation List.

(A) Per Call/Periodic BNA and Data Gathering Service

Per Call/Periodic BNA is the billing name and address information and Data Gathering is the billing telephone number, name, address and associated working telephone number information for customer provided ten digit end user telephone numbers required by the Telecommunications Service Provider customer to bill for calls placed within a specific time period. Per Call/Periodic BNA and DGS are offered subject to the conditions set forth in the following:

(1) A standard format for the receipt and provision of telephone number and billing name and address information will be established by the Telephone Company. Charges for each Per Call/Periodic BNA searched for and found or searched for and not found will be billed at rates in 8.9.1(A). Charges for each record accessed for DGS are set forth under 8.9.1(B). Per Call/Periodic BNA and DGS will be provided via magnetic tape, electronic transmission, or paper format, at the option of the customer, at rates in 8.9.1. The processing fee will be applied once per calendar year for BNAS processing done within that calendar year.

(2) The customer must order Per Call/Periodic BNA or DGS and provide test data tape at least 30 days prior to delivery of the first customer order.

(3) The frequency for receipt of the customer provided orders for Per Call/Periodic BNA or DGS will be no more than twice monthly and at intervals mutually agreed upon between the Telephone Company and the customer. The customer provided end user telephone numbers will be programmed by the Telephone Company with the proper end user's billing name and address contained in the Telephone Company's file at that time.

(4) Per Call/Periodic BNA and DGS information for nonlisted/nonpublished end user telephone numbers will be provided unless the nonlisted/nonpublished end user provides notice of non-consent to the Telephone Company of non-consent to the release of the BNA/DGS data. Within 30 days of receipt of such notice, the Telephone Company will discontinue disclosure of the nonlisted/nonpublished BNA/DGS data.

TARIFF BRANCH
RECEIVED
7/17/2006
PUBLIC SERVICE
COMMISSION
OF KENTUCKY

ISSUED: JULY 17, 2006
BY: Vice President
Lexington, Kentucky

EFFECTIVE: AUGUST 1, 2006

ACCESS SERVICE

8. Miscellaneous Services (Cont'd)

8.9 Billing Name and Address Service (BNAS) (Cont'd)

(A) Per Call/Periodic BNA and Data Gathering Service (Cont'd)

(5) For other than electronic transmission, the output records will be sent to the customer via first class U. S. Mail. The output records will normally be made available for mailing ten workdays after receipt of the customer order or at an interval mutually agreed upon. Availability may be delayed in case of input errors in the customer provided order.

(6) The customer may request data be transmitted. Data transmission charges will be determined on an ICB. Data transmission hardware and software specifications will be mutually agreed upon by the Telephone Company and the customer.

(7) Per Call/Periodic BNA and DGS detail will not be retained by the Telephone Company longer than 45 days. If the customer requests that the output be made available on a second occasion, such request must occur within 30 days from the date the first was made.

(8) Any customer, provided Per Call/Periodic BNA or DGS pursuant to this tariff, agrees to abide by all applicable rules, decisions, orders, statutes and laws concerning the disclosure of published and nonpublished telephone numbers, and further agrees to use the information contained therein only for the purpose of billing for services provided to their end users.

(9) In no case shall any customer or authorized billing and collection agent of a customer disclose the billing name and address information of any subscriber to any third party, except that a customer may disclose BNA/DGS information to its authorized billing and collection agent or to governmental law enforcement agencies.

(10) Conditions regarding refusal or discontinuance of this service are set forth in 2.1.8.

(B) End User Validation List

End User Validation Lists provide for the disclosure of all or a portion of end user/agent data available from the Telephone Company's records, to a Telecommunications Service Provider (customer), for purposes other than billing, and in compliance with the conditions set forth in Part 64.1201(c)(1) of the FCC's Rules and Regulations. In addition, End User Validation List Service is offered subject to the conditions set forth in 8.9(A)(9) above, and the following:

(1) Standard End User Validation Lists will be provided in three (3) files, business, coin (semipublic and public paystations) and residence. Nonlisted/nonpublished information will be excluded, with the exception of nonlisted public paystations. The lists may be ordered on a national, multi-state or state level basis, at the option of the customer, for any of the Telephone Company's jurisdictions subject to this tariff, unless prohibited by state regulation or state statute. Rates for the standard End User Validation List are set forth under 8.9.1(C).

TARIFF BRANCH
RECEIVED
7/17/2006
PUBLIC SERVICE
COMMISSION
OF KENTUCKY

ISSUED: JULY 17, 2006
BY: Vice President
Lexington, Kentucky

EFFECTIVE: AUGUST 1, 2006

ACCESS SERVICE

8. Miscellaneous Services (Cont'd)

8.9 Billing Name and Address Service (BNAS) (Cont'd)

(B) End User Validation List (Cont'd)

(2) Per calendar year, the customer may request up to two (2) lists per state for business, coin, and residence listings.

(3) A standard format will be established by the Telephone Company. Requests for special list sorts will be limited to an end user list separating those that are presubscribed to the requesting customer, and/or those that are not. The rate, per record, applicable to special sorts is set forth under 8.9.1(C).

(4) Each request shall be treated as a new request. Requests for updates from previous lists will not be provided.

(5) The customer shall have fifteen (15) business days from the date of delivery of a list to request any investigation of issues arising from the provision of the list.

(6) End User Validation Lists will normally be provided to the customer within thirty calendar days after receipt of a request and within ten (10) business days of extraction, or at an interval mutually agreed upon. The administrative fee set forth under 8.9.1(C) applies per request, whether ordered on a per state, multi-state, or national level.

(7) Conditions regarding refusal or discontinuance of this service are set forth in 2.1.8.

8.9.1 Rates and Charges

(A) Per Call/Periodic BNA

			USOC
(1)	Billing Name and Address Found, each	$ .35	BNYFX
(2)	Billing Name and Address Not Found, each	.25	BNYNX
(3)	Processing Fee*, Paper Report, Electronic Transmission, or Magnetic Tape/Each	50.00	BNYMX

* Applies once per calendar year for BNA processing done within that calendar year.

TARIFF BRANCH
RECEIVED
7/17/2006
PUBLIC SERVICE
COMMISSION
OF KENTUCKY

ISSUED: JULY 17, 2006
BY: Vice President
Lexington, Kentucky

EFFECTIVE: AUGUST 1, 2006

ACCESS SERVICE

8. Miscellaneous Services (Cont'd)

8.9 Billing Name and Address Service (BNAS) (Cont'd)

8.9.1 Rates and Charges (Cont'd)

(B) Data Gathering Service

			USOC
(1)	Per Record Accessed	$ .18	D7GPR
(2)	Processing Fee*, Paper Report, Electronic Transmission, or Magnetic Tape/Each	75.00	D7G

(C) End User Validation List

(1)	Standard Sort, Per Record Provided	.034	BVY1X
(2)	Administrative Fee, Paper Report, Electronic Transmission or Magnetic Tape/Per Request	78.00	BVY
(3)	Special Sort, Per Record Provided	.054	BVY2X

* Applies once per calendar year for DGS processing done within that calendar year.

TARIFF BRANCH
RECEIVED
7/17/2006
PUBLIC SERVICE
COMMISSION
OF KENTUCKY

ISSUED: JULY 17, 2006
BY: Vice President
Lexington, Kentucky

EFFECTIVE: AUGUST 1, 2006

ACCESS SERVICE

9. Interface Groups, Transmission Specifications and Channel Codes

9.1 Local Transport Interface Groups

Ten Interface Groups are provided for terminating the Local Transport at the customer's premises. Each Interface Group provides a specified premises interface code (e.g., two-wire, four-wire, DS1, etc.). At the option of the customer and where transmission facilities permit, the individual transmission path between the customer's premises and the first point of switching may be provided with optional features as set forth in 6.3.1 preceding.

As a result of the customer's access order and the type of Telephone Company transport facilities serving the customer's premises, the need for signaling conversions or two-wire to four-wire conversions, or the need to terminate digital or high frequency facilities in channel bank equipment may require that Telephone Company equipment be placed at the customer's premises. For example, if a voice frequency interface is ordered by the customer and the Telephone Company facilities serving the customers premises are digital, then Telephone Company channel bank equipment must be placed at the customer's premises in order to provide the voice frequency interface ordered by the customer.

Interface Group 1 is provided with Type C Transmission Specifications, and Interface Groups 2 through 10 are provided with Type A or B Transmission Specifications, depending on the Feature Group and whether the Access Service is routed directly or through an access tandem. All Interface Groups are provided with Data Transmission Parameters.

Only certain premises interfaces are available at the customer's premises. The premises interfaces codes associated with the Interface Groups may vary among Feature Groups. The various premises interfaces codes which are available with the Interface Groups, and the Feature Groups with which they may be used, are set forth in 9.1.11 following.

For each of the ten Interface Groups described following, the transmission path between the point of termination at the customer's premises and the first point of switching may be comprised of any form or configuration of plant and equipment capable of and typically used in the telecommunications industry for the transmission of voice and associated telephone signals within the frequency bandwidth of 300 to 3000 Hz.

TARIFF BRANCH
RECEIVED
7/17/2006
PUBLIC SERVICE
COMMISSION
OF KENTUCKY

ISSUED: JULY 17, 2006
BY: Vice President
Lexington, Kentucky

EFFECTIVE: AUGUST 1, 2006

ACCESS SERVICE

9. Interface Groups, Transmission Specifications and Channel Codes (Cont'd)

9.1 Local Transport Interface Groups (Cont'd)

9.1.1 Interface Group 1 (USOC TPP1X)

Interface Group 1 provides a two-wire voice frequency transmission path at the point of termination at the customer's premises. Interface Group 1 is not provided in association with FGC and FGD when the first point of switching is an access tandem. In addition, Interface Group 1 is not provided in association with FGB, FGC or FGD when the first point of switching can only provide four-wire terminations.

The interface is provided with loop supervisory signaling. When the interface is associated with FGA, such signaling will be loop start or ground start signaling. When the interface is associated with FGB, FGC or FGD, such signaling will be reverse battery signaling. When FGB, FGC or FGD access service is associated with a two-way calling interface, E&M signaling shall be used.

9.1.2 Interface Group 2 (USOC TTP2X)

Interface Group 2 provides four-wire voice frequency transmission at the point of termination at the customer's premises. The interface is provided with loop supervisory signaling. When the interface is associated with FGA, such signaling will be loop start or ground start signaling. When the interface is associated with FGB, FGC or FGD, such signaling, except for two-way calling which is E&M signaling, will be reverse battery signaling.

9.1.3 Interface Group 3 (USOC TPP3X)

Interface group 3 provides group level analog transmission at the point of termination at the customer's premises. The interface is capable of transmitting electrical signals between the frequencies of 60 to 180 kHz, with the capability to channelize up to 12 voice frequency transmission paths. Certain frequencies within the bandwidth of the Interface Group are reserved for Telephone Company use, e.g., pilot and carrier group alarm tones. Before the first point of switching, the Telephone Company will provide multiplex equipment to derive 12 transmission paths with a frequency bandwidth of approximately 300 to 3000 Hz.

The interface is provided with SF supervisory signaling for each individual transmission channel.

As of April 1, 1994, Interface Group 3 is available to existing customers only.

TARIFF BRANCH
RECEIVED
7/17/2006
PUBLIC SERVICE
COMMISSION
OF KENTUCKY

ISSUED: JULY 17, 2006
BY: Vice President
Lexington, Kentucky

EFFECTIVE: AUGUST 1, 2006

ACCESS SERVICE

9. Interface Groups, Transmission Specifications and Channel Codes (Cont'd)

9.1 Local Transport Interface Groups (Cont'd)

9.1.4 Interface Group 4 (USOC TPP4X)

Interface group 4 provides supergroup level analog transmission at the point of termination at the customer's premises. The interface is capable of transmitting electrical signals between the frequencies of 312 to 552 kHz, with the capability to channelize up to 60 voice frequency transmission paths. Certain frequencies within the bandwidth of the Interface Group are reserved for Company use, e.g., pilot and carrier group alarm tones. Before the first point of switching, the Company will provide multiplex and channel bank equipment to derive 60 transmission paths with a frequency bandwidth of approximately 300 to 3000 Hz.

The interface is provided with SF supervisory signaling for each individual transmission channel.

As of April 1, 1994, Interface Group 4 is available to existing customers only.

9.1.5 Interface Group 5 (USOC TPP5X)

Interface Group 5 provides mastergroup level analog transmission at the point of termination at the customer's premises. The interface is capable of transmitting electrical signals between the frequencies of 564 to 3084 kHz, with the capability to channelize up to 600 voice frequency transmission paths. Certain frequencies within the bandwidth of the Interface Group are reserved for Company use, e.g., pilot and carrier group alarm tones. Before the first point of switching, the Company will provide multiplex and channel bank equipment to derive 600 transmission paths within a frequency bandwidth of approximately 300 to 3000 Hz.

The interface is provided with SF supervisory signaling for each individual transmission channel.

As of April 1, 1994, Interface Group 5 is available to existing customers only.

TARIFF BRANCH
RECEIVED
7/17/2006
PUBLIC SERVICE
COMMISSION
OF KENTUCKY

ISSUED: JULY 17, 2006
BY: Vice President
Lexington, Kentucky

EFFECTIVE: AUGUST 1, 2006

ACCESS SERVICE

9. Interface Groups, Transmission Specifications and Channel Codes (Cont'd)

9.1 Local Transport Interface Groups (Cont'd)

9.1.6 Interface Group 6 (USOC TPP6X)

Interface Group 6 provides DS1 level digital transmission at the point of termination at the customer's premises. The interface is capable of transmitting electrical signals at a nominal 1.544 Mbps, with the capability to channelize up to 24 voice frequency transmission paths. Before the first point of switching, when analog switching utilizing analog termination is provided, the Company will provide multiplex and channel bank equipment to derive 24 transmission paths with a frequency bandwidth of approximately 300 to 3000 Hz. When digital switching or analog switching with digital carrier terminations is provided, the Company will provide, at the first point of switching, a DS1 signal in D3/D4 format.

The interface is provided with bit stream supervisory signaling for each individual transmission channel.

9.1.7 Interface Group 7 (USOC TPP7X)

Interface Group 7 provides DS1C level digital transmission at the point of termination at the customer's premises. The interface is capable of transmitting electrical signals at a nominal 3.152 Mbps, with the capability to channelize up to 48 voice frequency transmission paths. Before the first point of switching, when analog switching utilizing analog terminations is provided, the Company will provide multiplex and channel bank equipment to derive up to 48 voice frequency transmission paths with a frequency bandwidth of approximately 300 to 3000 Hz. When digital switching or analog switching with digital carrier terminations is provided, the Company will provide, at the first point of switching, DS1 signals in D3/D4 format.

The interface is provided with bit stream supervisory signaling for each individual transmission channel.

As of April 1, 1994, Interface Group 7 is available to existing customers only.

TARIFF BRANCH
RECEIVED
7/17/2006
PUBLIC SERVICE
COMMISSION
OF KENTUCKY

ISSUED: JULY 17, 2006
BY: Vice President
Lexington, Kentucky

EFFECTIVE: AUGUST 1, 2006

ACCESS SERVICE

9. Interface Groups, Transmission Specifications and Channel Codes (Cont'd)

9.1 Local Transport Interface Groups (Cont'd)

9.1.8 Interface Group 8 (USOC TPP8X)

Interface Group 8 provides DS2 level digital transmission at the point of termination at the customer's premises. The interface is capable of transmitting electrical signals at a nominal 6.312 Mbps, with the capability to channelize up to 96 voice frequency transmission paths. Before the first point of switching, when analog switching utilizing analog terminations is provided, the Company will provide multiplex and channel bank equipment in its office to derive up to 96 transmission paths with a frequency bandwidth of approximately 300 to 3000 Hz. When digital switching, or analog switching with digital carrier terminations is provided, the Company will provide, at the first point of switching, DS1 signals in D3/D4 format.

The interface is provided with bit stream supervisory signaling for each individual transmission channel.

Interface Group 8 is provided on an Individual Case Basis.

9.1.9 Interface Group 9 (USOC TPP9X)

Interface Group 9 provides DS3 level digital transmission at the point of termination at the customer's premises. The interface is capable of transmitting electrical signals at a nominal 44.736 Mbps, with the capability to channelize up to 672 voice frequency transmission paths. Before the first point of switching, when analog switching utilizing analog termination is provided, the Company will provide multiplex and channel bank equipment to derive up to 672 transmission paths with a frequency bandwidth of approximately 300 to 3000 Hz. When digital switching, or analog switching with digital carrier terminations is provided, the Company will provide, at the first point of switching, DS1 signals in D3/D4 format.

The interface is provided with bit stream supervisory signaling for each individual transmission channel.

TARIFF BRANCH
RECEIVED
7/17/2006
PUBLIC SERVICE
COMMISSION
OF KENTUCKY

ISSUED: JULY 17, 2006
BY: Vice President
Lexington, Kentucky

EFFECTIVE: AUGUST 1, 2006

ACCESS SERVICE

9. Interface Groups, Transmission Specifications and Channel Codes (Cont'd)

9.1 Local Transport Interface Groups (Cont'd)

9.1.10 Interface Group 10 (USOC TPP8X)

Interface Group 10 provides DS4 level digital transmission at the point of termination at the customer's premises. The interface is capable of transmitting electrical signals at a nominal 274.176 Mbps, with the capability to channelize up to 4032 voice frequency transmission paths. Before the first point of switching, when analog switching utilizing analog terminations is provided, the Company will provide multiplex and channel bank equipment to derive up to 4032 transmission paths with a frequency bandwidth of approximately 300 to 3000 Hz. When digital switching or analog switching with digital carrier terminations is provided, the Company will provide, at the first point of switching, DS1 signals in D3/D4 format.

The interface is provided with bit stream supervisory signaling for each individual transmission channel.

Interface Group 10 is provided on an Individual Case Basis.

9.1.11 Available Premises Interface Codes

Following is a matrix showing which premises interface codes are available for each Interface Group as a function of the Company switch supervisory signaling and Feature Group. For explanations of these codes, see the Glossary of Channel Interface Codes in 9.3.1 following.

TARIFF BRANCH
RECEIVED
7/17/2006
PUBLIC SERVICE
COMMISSION
OF KENTUCKY

ISSUED: JULY 17, 2006
BY: Vice President
Lexington, Kentucky

EFFECTIVE: AUGUST 1, 2006

ACCESS SERVICE

9. Interface Groups, Transmission Specifications and Channel Codes (Cont'd)

9.1 Local Transport Interface Groups (Cont'd)

9.1.11 Available Premises Interface Codes (Cont'd)

Interface Group	Company Switch	Company Supervisory Signaling	Premises Interface Code	Feature Group A	Feature Group B	Feature Group C	Feature Group D
1	LO	2LS2	X				
	LO	2LS3	X				
	GO	2GS2	X				
	G0	2GS3	X				
	LO, GO	2DX3	X				
	LO, GO	4EA3-E	X				
	LO, GO	4EA3-M	X				
	LO, GO	6EB3-E	X				
	LO, GO	6EB3-M	X				
	RV, EA, EB, EC		2DX3		X	X	X
	RV, EA, EB, EC		4EA3-E		X	X	X
	RV, EA, EB, EC		4EA3-M		X	X	X
	RV, EA, EB, EC		6EB3-E		X	X	X
	RV, EA, EB, EC		6EB3-M		X	X	X
	EA, EB, EC	6EC3			X	X	
	RV	2RV3-0		X	X	X	
	RV	2RV3-T		X	X	X	
2	LO, GO	4SF2	X				
	LO, GO	4SF3	X				
	LO	4LS2	X				
	LO	4LS3	X				
	LO	6LS2	X				
	G0	4GS2	X				
	G0	4GS3	X				
	G0	6GS2	X				
	LO, GO	4DX2	X				
	LO, GO	4DX3	X				
	LO, GO	6EA2-E	X				
	LO, GO	6EA2-M	X				
	LO, GO	8EB2-E	X				
	LO, GO	8EB2-M	X				
	LO, GO	6EX2-B	X				

TARIFF BRANCH
RECEIVED
7/17/2006
PUBLIC SERVICE
COMMISSION
OF KENTUCKY

ISSUED: JULY 17, 2006
BY: Vice President
Lexington, Kentucky

EFFECTIVE: AUGUST 1, 2006

ACCESS SERVICE

9. Interface Groups, Transmission Specifications and Channel Codes (Cont'd)

9.1 Local Transport Interface Groups (Cont'd)

9.1.11 Available Premises Interface Codes (Cont'd)

Interface Group	Company Switch Supervisory Signaling	Premises Interface Code	Feature Group A	B	C	D
2 (Cont'd)	RV, EA, EB, EC	4SF2		X	X	X
	RV, EA, EB, EC	4SF3		X		
	RV, EA, EB, EC	4DX2		X	X	X
	RV, EA, EB, EC	4DX3		X	X	X
	RV, EA, EB, EC	6DX2			X	
	RV, EA, EB, EC	6EA2-E		X	X	X
	RV, EA, EB, EC	6EA2-M		X	X	X
	RV, EA, EB, EC	8EB2-E		X	X	X
	RV, EA, EB, EC	8EB2-M		X	X	X
	EA, EB, EC	8EC2-M			X	X
	RV	4RV2-O		X	X	X
	RV	4RV2-T		X	X	X
	RV	4RV3-0		X	X	
	RV	4RV3-T		X	X	
3	LO, GO	4AH5-B		X		
	RV, EA, EB, EC	4AH5-B		X	X	X
4	LO, GO	4AH6-C		X		
	RV, EA, EB, EC	4AH6-C		X	X	X
5	LO, GO	4AH6-D		X		
	RV, EA, EB, EC	4AH6-D		X	X	X
6	LO, GO	4DS9-15		X		
	LO, GO	4DS9-15L		X		
	RV, EA, EB, EC	4DS9-15		X	X	X
	RV, EA, EB, EC	4DS9-15L		X	X	X
7	LO, GO	4DS9-31		X		
	RV, EA, EB, EC	4DS9-32		X	X	X
	LO, GO	4DS9-31L		X		
	RV, EA, EB, EC	4DS9-31L		X	X	X

TARIFF BRANCH
RECEIVED
7/17/2006
PUBLIC SERVICE
COMMISSION
OF KENTUCKY

ISSUED: JULY 17, 2006
BY: Vice President
Lexington, Kentucky

EFFECTIVE: AUGUST 1, 2006

ACCESS SERVICE

9. Interface Groups, Transmission Specifications and Channel Codes (Cont'd)

9.1 Local Transport Interface Groups (Cont'd)

9.1.11 Available Premises Interface Codes (Cont'd)

Interface Group	Company Switch Supervisory Signaling	Premises Interface Code	Feature Group A	B	C	D
8	LO, GO	4DSO-63	X			
	LO, GO	4DSO-63L	X			
	RV, EA, EB, EC	4DSO-63		X	X	X
	RV, EA, EB, EC	4DSO-63L		X	X	X
9	LO, GO	4DS6-44	X			
	LO, GO	4DS6-44L	X			
	RV, EA, EB, EC	4DS6-44		X	X	X
	RV, EA, EB, EC	4DS6-44L		X	X	X
10	LO, GO	4DS6-27	X			
	LO, GO	4DS6-27L	X			
	RV, EA, EB, EC	4DS6-27		X	X	X
	RV, EA, EB, EC	4DS6-27L		X	X	X

TARIFF BRANCH
RECEIVED
7/17/2006
PUBLIC SERVICE
COMMISSION
OF KENTUCKY

ISSUED: JULY 17, 2006
BY: Vice President
Lexington, Kentucky

EFFECTIVE: AUGUST 1, 2006

ACCESS SERVICE

9. Interface Groups, Transmission Specifications and Channel Codes (Cont'd)

9.2 Transmission Specifications for Switched Access Service

The Company will maintain existing transmission specifications of functioning service configurations installed prior to the effective date of this tariff except that service configurations having performance specifications exceeding the standards listed in this provision will be maintained at performance levels specified in this tariff.

The transmission specifications contained in this Section are immediate action limits. Acceptance limits are set forth in Technical Reference Publication TR-NPL-000334. This Technical Reference also provides the basis for determining Switched Access Service maintenance limits.

9.2.1 Standard Transmission Specifications

Following are descriptions of the three Standard Transmission Specifications available with Switched Access Services. The specific applications in terms of the Switched Access Arrangements and Interface Groups with which the Switched Access Arrangement Standard Transmission Specifications are provided are set forth in Section 6.2 preceding.

(A) Type A Transmission Specifications

Type A Transmission Specifications is provided with the following parameters:

(1) Loss Deviation

The maximum Loss Deviation of the 1004 Hz loss relative to the Expected Measured Loss (EML) is ±2.0 dB

TARIFF BRANCH
RECEIVED
7/17/2006
PUBLIC SERVICE
COMMISSION
OF KENTUCKY

ISSUED: JULY 17, 2006
BY: Vice President
Lexington, Kentucky

EFFECTIVE: AUGUST 1, 2006

ACCESS SERVICE

9. Interface Groups, Transmission Specifications and Channel Codes (Cont'd)

9.2 Transmission Specifications for Switched Access Service (Cont'd)

9.2.1 Standard Transmission Specifications (Cont'd)

(A) Type A Transmission Specifications (Cont'd)

(2) Attenuation Distortion

The maximum Attenuation Distortion in the 404 to 2804 Hz frequency band relative to the loss 1004 Hz is -1.0 dB to +3.0 dB.

(3) C-Message Noise

The maximum C-Message Noise for the transmission path at the route miles listed is less than or equal to:

Route Miles	C-Message Noise
less than 50	32 dBrnCO
51 to 100	34 dBrnCO
101 to 200	37 dBrnCO
201 to 400	40 dBrnCO
401 to 1000	42 dBrnCO

(4) C-Notch Noise

The maximum C-Notch Noise, utilizing a -16 dBmO holding tone, is less than or equal to 45 dBrnCO.

(5) Echo Control

Echo Control, identified as Equal Level Echo Path Loss, and expressed as Echo Return Loss and Singing Return Loss, is dependent on the routing, i.e., whether the service is routed directly from the customer's Point of Termination (POT) to the end office or via an access tandem. It is equal to or greater than the following:

TARIFF BRANCH
RECEIVED
7/17/2006
PUBLIC SERVICE
COMMISSION
OF KENTUCKY

ISSUED: JULY 17, 2006
BY: Vice President
Lexington, Kentucky

EFFECTIVE: AUGUST 1, 2006

ACCESS SERVICE

9. Interface Groups, Transmission Specifications and Channel Codes (Cont'd)

9.2 Transmission Specifications for Switched Access Service (Cont'd)

9.2.1 Standard Transmission Specifications (Cont'd)

(A) Type A Transmission Specifications (Cont'd)

(5) Echo Control (Cont'd)

	Echo Return Loss	Singing Return Loss
POT to Access Tandem	21 dB	14 dB
POT to End Office		
- Direct	N/A	N/A
- Via Access Tandem	16 dB	11 dB

(6) Standard Return Loss

Standard Return Loss expressed as Echo Return Loss and Singing Return Loss on two-wire ports of a four-wire point of termination shall be equal to or greater than:

Echo Return Loss	Singing Return Loss
5 dB	2.5 dB

(B) Type B transmission Specifications

Type B Transmission Specifications is provided with the following parameters:

(1) Loss Deviation

The maximum Loss Deviation of the 1004 Hz loss relative to the Expected Measured Loss (EML) is ± 2.5 dB.

(2) Attenuation Distortion

The maximum Attenuation Distortion is the 404 to 2804 Hz frequency band relative to loss at 1004 Hz is -2.0 dB to +4.0 dB.

TARIFF BRANCH
RECEIVED
7/17/2006
PUBLIC SERVICE
COMMISSION
OF KENTUCKY

ISSUED: JULY 17, 2006
BY: Vice President
Lexington, Kentucky

EFFECTIVE: AUGUST 1, 2006

ACCESS SERVICE

9. Interface Groups, Transmission Specifications and Channel Codes (Cont'd)

9.2 Transmission Specifications for Switched Access Service (Cont'd)

9.2.1 Standard Transmission Specifications (Cont'd)

(B) Type B Transmission Specifications (Cont'd)

(3) C-Message Noise

The maximum C-Message Noise for the transmission path at the route miles listed is less than or equal to:

Route Miles	C-Message Noise* Type B1	C-Message Noise* Type B2
less than 50	32 dBrnCO	35 dBrnCO
51 to 100	33 dBrnCO	37 dBrnCO
101 to 200	35 dBrnCO	40 dBrnCO
201 to 400	37 dBrnCO	43 dBrnCO
401 to 1,000	39 dBrnCO	45 dBrnCO

(4) C-Notch Noise

The maximum C-Notch Noise, utilizing a -16 dBmO holding tone is less than or equal to 47 dBrnCO.

(5) Echo Control

Echo Control, identified as Impedance Balance for FGA, FGB and Equal Level Echo Path Loss for FGC, FGD, and expressed as Echo Return Loss (ERL) and Singing Return Loss (SRL), is dependent on the routing, i.e., whether the service is routed directly from the customer's point of termination (POT) to the end office or via an access tandem. The ERL and SRL also differ by Switched Access Service, type of termination, and type of transmission path. They are

* For FGC and FGD only Type B2 will be provided. For FGA and FGB, Type B1 or B2 will be provided as set forth in Technical Reference Publication TR-NPL-00033

TARIFF BRANCH
RECEIVED
7/17/2006
PUBLIC SERVICE
COMMISSION
OF KENTUCKY

ISSUED: JULY 17, 2006
BY: Vice President
Lexington, Kentucky

EFFECTIVE: AUGUST 1, 2006

ACCESS SERVICE

9. Interface Groups, Transmission Specifications and Channel Codes (Cont'd)

9.2 Transmission Specifications for Switched Access Service (Cont'd)

9.2.1 Standard Transmission Specifications (Cont'd)

(B) Type B Transmission Specifications (Cont'd)

(5) Echo Control (Cont'd)

	Echo Return Loss	Singing Return Loss
POT to Access Tandem		
- Terminated in 4-Wire trunk	21 dB	14 dB
POT to End Office		
- Terminated in 2-Wire trunk	16 dB	11 dB
POT to End Office		
- Direct	16 dB	11 dB
- Via Access Tandem		
. For FGB access	8 dB	4 dB
. For FGC access (Effective 4 Wire trans-mission path at end office)	16 dB	11 dB
. For FGC access (Effective 2-Wire trans-mission path at end office)	13 dB	6 dB

(6) Standard Return Loss

Standard Return Loss, expressed as Echo Return Loss and Singing return Loss, on two-wire ports of a four-wire point of termination shall be equal to or greater than:

Echo Return Loss	Singing Return Loss
5 dB	2.5 dB

TARIFF BRANCH
RECEIVED
7/17/2006
PUBLIC SERVICE
COMMISSION
OF KENTUCKY

ISSUED: JULY 17, 2006
BY: Vice President
Lexington, Kentucky

EFFECTIVE: AUGUST 1, 2006

ACCESS SERVICE

9. Interface Groups, Transmission Specifications and Channel Codes (Cont'd)

9.2 Transmission Specifications for Switched Access Service (Cont'd)

9.2.1 Standard Transmission Specifications (Cont'd)

(C) Type C Transmission Specifications

Type C Transmission Specifications is provided with the following parameters:

(1) Loss Deviation

The maximum Loss Deviation of the 1004 Hz loss relative to the Expected Measured Loss (EML) is ± 3.0 dB.

(2) Attenuation Distortion

The maximum Attenuation Distortion in the 404 to 2804 Hz frequency band relative to loss at 1004 Hz is -2.0 dB to +5.5 dB.

(3) C-Message Noise

The maximum C-Message Noise for the transmission path at the route miles listed is less than or equal to:

Route Miles	C-Message Noise* Type B1	C-Message Noise* Type B2
less than 50	32 dBrnCO	38 dBrnCO
51 to 100	33 dBrnCO	39 dBrnCO
101 to 200	35 dBrnCO	41 dBrnCO
201 to 400	37 dBrnCO	43 dBrnCO
401 to 1000	39 dBrnCO	45 dBrnCO

(4) C-Notch Noise

The maximum C-Notch Noise, utilizing a -16 dBmO holding tone is less than or equal to 47 dBrnCO.

* For FGC and FGD only Type C2 will be provided. For FGA and FGB , Type C1 or C2 will be provided as set forth in Technical Reference Publication TR-NPL-000334.

TARIFF BRANCH
RECEIVED
7/17/2006
PUBLIC SERVICE
COMMISSION
OF KENTUCKY

ISSUED: JULY 17, 2006
BY: Vice President
Lexington, Kentucky

EFFECTIVE: AUGUST 1, 2006

ACCESS SERVICE

9. Interface Groups, Transmission Specifications and Channel Codes (Cont'd)

9.2 Transmission Specifications for Switched Access Service (Cont'd)

9.2.1 Standard Transmission Specifications (Cont'd)

(C) Type C Transmission Specifications (Cont'd)

(5) Echo Control

Echo Control, identified as Return Loss and expressed as Echo Return Loss and Singing Return Loss is dependent on the routing, i.e., whether the service is routed directly from the customer's point of termination (POT) to the end office or via an access tandem. It is equal to or greater than the following:

	Echo Return Loss	Singing Return Loss
POT to Access Tandem	13 dB	6 dB
POT to End Office		
- Direct	13 dB	6 dB
- Via Access Tandem (For FGB only)	8 dB	4 dB

TARIFF BRANCH
RECEIVED
7/17/2006
PUBLIC SERVICE COMMISSION OF KENTUCKY

ISSUED: JULY 17, 2006
BY: Vice President
Lexington, Kentucky

EFFECTIVE: AUGUST 1, 2006

ACCESS SERVICE

9. Interface Groups, Transmission Specifications and Channel Codes (Cont'd)

9.2 Transmission Specifications for Switched Access Service (Cont'd)

9.2.2 Data Transmission Parameters

Two types of Data Transmission Parameters, i.e., Type DA and Type DB, are provided for the Switched Access Service arrangements. The specific applications in terms of the Feature Groups with which they are provided are set forth in Section 6.2 preceding. In addition, the Switched Access Interface is provided with Data Transmission Parameters. Following are descriptions of each parameter.

(A) Data Transmission Parameters Type DA

(1) Signal to C-Notched Noise Ratio

The Signal to C-Notched Noise Ratio is equal to or greater than 33 dB.

(2) Envelope Delay Distortion

The maximum envelope Delay Distortion for the frequency bands and route miles specified is:

604 to 2804 Hz	
less than 30 route miles	500 microseconds
equal to or greater than 30 route miles	900 microseconds

1004 to 2404 Hz	
less than 50 route miles	200 microseconds
equal to or greater than 50 route miles	400 microseconds

(3) Impulse Noise Counts

The Impulse Noise Counts exceeding a 65 dBrnCO threshold in 15 minutes is no more than 15 counts.

(4) Intermodulation Distortion

The Second Order (R2) and Third Order (R3) Intermodulation Distortion products are equal to or greater than:

Second Order (R2)	33 dB
Third Order (R3)	37 dB

TARIFF BRANCH
RECEIVED
7/17/2006
PUBLIC SERVICE
COMMISSION
OF KENTUCKY

ISSUED: JULY 17, 2006
BY: Vice President
Lexington, Kentucky

EFFECTIVE: AUGUST 1, 2006

ACCESS SERVICE

9. Interface Groups, Transmission Specifications and Channel Codes (Cont'd)

9.2 Transmission Specifications for Switched Access Service (Cont'd)

9.2.2 Data Transmission Parameters (Cont'd)

(A) Data Transmission Parameters (Cont'd)

(5) Phase Jitter

The Phase Jitter over the 4-300 Hz frequency band is less than or equal to 5° peak-to-peak.

(6) Frequency Shift

The maximum Frequency Shift does not exceed -2 to +2 Hz.

(B) Data Transmission Parameters Type DB

(1) Signal to C-Notched Noise Ratio

The signal to C-Notched Noise Ratio is equal to or greater than 30 dB.

(2) Envelope Delay Distortion

The maximum Envelope Delay Distortion for the frequency bands and route miles specified is:

	604 to 2804 Hz
less than 50 route miles	800 microseconds
equal to or greater than 50 route miles	1000 microseconds

	1004 to 2404 Hz
less than 50 route miles	320 microseconds
equal to or greater than 50 route miles	500 microseconds

(3) Impulse Noise Counts

The Impulse Noise Counts exceeding a 67 dBrnCO threshold in 15 minutes is no more than 15 counts.

TARIFF BRANCH
RECEIVED
7/17/2006
PUBLIC SERVICE
COMMISSION
OF KENTUCKY

ISSUED: JULY 17, 2006
BY: Vice President
Lexington, Kentucky

EFFECTIVE: AUGUST 1, 2006

ACCESS SERVICE

9. Interface Groups, Transmission Specifications and Channel Codes (Cont'd)

9.2 Transmission Specifications for Switched Access Service (Cont'd)

9.2.2 Data Transmission Parameters (Cont'd)

(B) Data Transmission Parameters Type DB (Cont'd)

(4) Intermodulation Distortion

The Second Order (R2) and Third Order (R3) Intermodulation Distortion products are equal to or greater than:

Second Order (R2)	31 dB
Third Order (R3)	34 dB

Phase Jitter

The Phase Jitter over the 4-300 Hz frequency band is less than or equal to 7° peak-to-peak.

Frequency Shift

The maximum Frequency Shift does not exceed -2 to + 2 Hz.

9.3 Channel Interface and Network Channel Codes

This section explains the Channel Interface codes and Network Channel codes that the customer must specify when ordering Special Access Service. Included is an example which explains the specific characters of the code, a glossary of Channel Interface codes, impedance levels, Network Channel codes and compatible Channel Interfaces.

Example: If the customer specifies a NT Network Channel Code and a 2DS8-3 Channel Interface at the customer's premises, the following is being requested:

NT =	Metallic Circuit with a Predefined Technical Specification Package (1)
2 =	Number of physical wires at customer premises
DS =	Facility interface for direct current or voltage
8 =	Variable impedance level
3 =	Metallic facilities (DC continuity) for direct current/low frequency control signals or slow speed data (30 baud)

TARIFF BRANCH
RECEIVED
7/17/2006
PUBLIC SERVICE
COMMISSION
OF KENTUCKY

ISSUED: JULY 17, 2006
BY: Vice President
Lexington, Kentucky

EFFECTIVE: AUGUST 1, 2006

ACCESS SERVICE

9. Interface Groups, Transmission Specifications and Channel Codes (Cont'd)

9.3 Channel Interface and Network Channel Codes (Cont'd)

9.3.1 Glossary of Channel Interface Codes and Options

Code	Option	Definition
AB -		accepts 20 Hz ringing signal at customer's point of termination
AC -		accepts 20 Hz ringing signal at customer's end user's point of termination
AH -		analog high capacity interface
-	B	60 kHz to 108 kHz (12 channels)
-	C	312 kHz to 552 kHz (60 channels)
-	D	564 kHz to 3084 kHz (600 channels)
CT -		Centrex Tie Trunk Termination
DA -		data stream in VF frequency band at customer's end user's point of termination
DB -		data stream in VF frequency band at customer's point of termination
-	10	VF for TG1 and TG2
-	43	VF for 43 Telegraph Carrier type signals, TG1 and TG2 DC -direct current or voltage
-	1	monitoring interface with series RC combination (McCulloh format)
-	2	Telephone Company energized alarm channel
-	3	Metallic facilities (DC continuity) for direct current/low frequency control signals or slow speed data (30 baud)
DD -		DATAPHONE Select-A-Station (and TABS) interface at customer's point of termination
DE -		DATAPHONE Select-A-Station (and TABS) interface at the customer's end user's point of termination
DS -		digital hierarchy interface
-	15	1.544 mbps (DS1) format per PUB 41451 plus D4
-	15E	8-bit PCM encoded in one 64 kbps of the DS1 signal
-	15F	8-bit PCM encoded in two 64 kbps of the DS1 signal
-	15G	8-bit PCM encoded in three 64 kbps of the DS1 signal
-	15H	14/11-bit encoded in six 64 kbps of the DS1 signal
-	15J	1.544 Mbps format per PUB 41451

TARIFF BRANCH
RECEIVED
7/17/2006
PUBLIC SERVICE
COMMISSION
OF KENTUCKY

ISSUED: JULY 17, 2006
BY: Vice President
Lexington, Kentucky

EFFECTIVE: AUGUST 1, 2006

ACCESS SERVICE

9. Interface Groups, Transmission Specifications and Channel Codes (Cont'd)

9.3 Channel Interface and Network Channel Codes (Cont'd)

9.3.1 Glossary of Channel Interface Codes and Options (Cont'd)

Code	Option	Definition
DS (Cont'd)		
-	15K	1.544 Mbps format per PUB 41451 plus extended framing format
-	15L	1.544 Mbps (DS1) with SF signaling
-	27	274.176 Mbps (DS4)
-	44	44.736 Mbps (DS3)
-	44L	44.736 Mbps (DS3) with SF signaling
-	63	6.312 Mbps (DS2)
-	63L	6.312 Mbps (DS2) with SF signaling
DU		digital access interface
-	24	2.4 kbps
-	48	4.8 kbps
-	56	56.0 kbps
-	96	9.6 kbps
-	A	1.544 Mbps format per PUB 41451
-	B	1.544 Mbps format per PUB 41451 plus D4
-	C	1.544 Mbps format per PUB 41451 plus extended framing format
DX -		duplex signaling interface at customer's point of termination
DY -		duplex signaling interface at customer's end user's point of termination
EA -	E	type I E&M Lead Signaling. Customer at POT or customer's end user at POT originates on E Lead.
EA -	M	Type I E&M Lead signaling. Customer at POT or customer's end user at POT originates on M Lead.
EB -	E	Type II E&M Lead Signaling. Customer at POT or customer's end user at POT originates on M Lead.
EC -		Type III E&M signaling at customer POT

TARIFF BRANCH
RECEIVED
7/17/2006
PUBLIC SERVICE
COMMISSION
OF KENTUCKY

ISSUED: JULY 17, 2006
BY: Vice President
Lexington, Kentucky

EFFECTIVE: AUGUST 1, 2006

ACCESS SERVICE

9. Interface Groups, Transmission Specifications and Channel Codes (Cont'd)

9.3 Channel Interface and Network Channel Codes (Cont'd)

9.3.1 Glossary of Channel Interface Codes and Options (Cont'd)

Code	Option	Definition
EX -	A	tandem channel unit signaling for loop start or ground start and customer supplies open end (dial tone, etc.) functions.
EX -	B	tandem channel unit signaling for loop start or ground start and customer supplies closed end (dial pulsing, etc.) functions.
GO -		ground start loop signaling - open end function by customer or customer's end user.
GS -		ground start loop signaling - closed end function by customer or customer's end user
IA -		E.I.A. (25 pin RS-232)
LA -		end user loop start loop signaling - Type A OPS registered port open end
LB -		end user loop start loop signaling - Type B OPS registered port open end
LC -		end user loop start loop signaling - Type C OPS registered port open end
LO -		loop start loop signaling - open end function by customer or customer's end user
LR -		20 Hz automatic ringdown interface at customer with Telephone Company provided PLAR
LS -		loop start loop signaling - closed end function by customer or customer's end user
NO -		no signaling interface, transmission only
PG -		program transmission - no dc signaling
- 1		nominal frequency from 50 to 15000 Hz
- 3		nominal frequency from 200 to 3500 Hz
- 5		nominal frequency from 100 to 5000 Hz
- 8		nominal frequency from 50 to 8000 Hz
PR		protective relaying*
RV –O		reverse battery signaling, one way operation, originate by customer
-T		reverse battery signaling, one way operation, terminate function by customer or customer's end user.

*Available only for the transmission of audio tone protective relaying signals used in the protection of electric power systems during fault conditions.

TARIFF BRANCH
RECEIVED
7/17/2006
PUBLIC SERVICE
COMMISSION
OF KENTUCKY

ISSUED: JULY 17, 2006
BY: Vice President
Lexington, Kentucky

EFFECTIVE: AUGUST 1, 2006

ACCESS SERVICE

9. Interface Groups, Transmission Specifications and Channel Codes (Cont'd)

9.3 Channel Interface and Network Channel Codes (Cont'd)

9.3.1 Glossary of Channel Interface Codes and Options (Cont'd)

Code	Option	Definition
SF -		single frequency signaling with VF band at either customer POT or customer's end user POT
TF -		telephotograph interface
TT -		telegraph/teletypewriter interface at either customer POT or customer's end user POT
-2		20.0 milliamperes
-3		3.0 milliamperes
-6		62.5 milliamperes
TV -		television interface
-1		combined (diplexed) video and one audio signal
-2		combined (diplexed) video and two audio signals
-5		video plus one (or two) audio 5 kHz signal(s) or one (or two) two wire
-	15	video plus one (or two) audio 15 kHz signal(s)
WA -		wideband bandwidth interface at customer's end user POT
-	1	limited bandwidth
-	2	nominal passband from 29000 to 44000 Hz
WB -		wideband data interface at customer POT
-	18S	18.75 kbps, synchronous
-	19A	up to 19.2 kbps asynchronous
-	19S	19.2 kbps synchronous
-	23A	up to 230.4 kbps, asynchronous
-	23S	230.4 kbps, synchronous
-	40S	40.8 kbps, synchronous
-	50A	up to 50.0 kbps, asynchronous
-	50S	50.0 kbps synchronous
WC -		wideband data interface at customer's end user POT
-	18	18.75 kbps, synchronous
-	19	for 12-wire interface: 19.2 kbps, synchronous for 10-wire interface: up to 19.2 kbps, asynchronous up to 230.4 kbps, asynchronous
-	23	asynchronous up to 230.4 kbps, asynchronous
-	23S	230.4 kbps, synchronous
-	40	40.8 kbps, synchronous
-	50	for 12-wire interface: 50.0 kbps, synchronous for 10-wire interface: up to 50.0 kbps, asynchronous
WD -		wideband bandwidth interface at customer POT
-	1	nominal passband from 300 to 18000 Hz
-	2	nominal passband from 28000 to 44000 Hz
-	3	nominal passband from 29000 to 44000 Hz

TARIFF BRANCH
RECEIVED
7/17/2006
PUBLIC SERVICE
COMMISSION
OF KENTUCKY

ISSUED: JULY 17, 2006
BY: Vice President
Lexington, Kentucky

EFFECTIVE: AUGUST 1, 2006

ACCESS SERVICE

9. Interface Groups, Transmission Specifications and Channel Codes (Cont'd)

9.3 Channel Interface and Network Channel Codes (Cont'd)

9.3.2 Impedance

The nominal reference impedance with which the channel will be terminated for the purpose of evaluating transmission performance:

Value (ohms)	Code(s)
110	0
150	1
600	2
900	3+
135	5
75	6
124	7
Variable	8
100	9

\+ For those interface codes with a 4-wire transmission path at the customer's POT, rather than a standard 900 ohm impedance the code (3) denotes a customer provided transmission equipment termination. Such terminations were provided to customers in accordance with F.C.C. Docket no. 20099 Settlement Agreement.

9.3.3 Digital Hierarchy Channel Interface Codes (4DS)

Customers selecting the multiplexed four-wire DSX-1 or higher facility interface option at the customer designated premises will be requested to provide subsequent system and channel assignment data. The various digital bit rates in the digital hierarchy employ the channel interface code 4DS8, 4DS0 or 4DS6 plus the speed options indicated below:

Interface Code and Speed Option	Nominal Bit Rate (Mbps)	Digital Hierarchy Level
4DS8-15	1.544	DS1
4DS9-31	3.152	DS1C
4DS0-63	6.312	DS2
4DS6-44	44.736	DS3
4DS6-27	274.176	DS4

TARIFF BRANCH
RECEIVED
7/17/2006
PUBLIC SERVICE
COMMISSION
OF KENTUCKY

ISSUED: JULY 17, 2006
BY: Vice President
Lexington, Kentucky

EFFECTIVE: AUGUST 1, 2006

ACCESS SERVICE

9. Interface Groups, Transmission Specifications and Channel Codes (Cont'd)

9.3 Channel Interface and Network Channel Codes (Cont'd)

9.3.4 Service Designator/Network Channel Code Conversion Table

The purpose of this table is to show the relationship between the service designator codes (e.g. VGC, MT2, etc.) and the network channel codes that are used for various administrative purposes.

Service Designator Code	Network Channel Code
MTC	MQ
MT1	NT
MT2	NU
MT3	NV
TGC	NQ
TG1	NW
TG2	NY
VGC	LQ
VG1	LB
VG2	LC
VG3	LD
VG4	LE
VG5	LF
VG6	LG
VG7	LH
VG8	LJ
VG9	LK
VG10	LN
VG11	LP
VG12	LR
APC	PQ
AP1	PE
AP2	PF
AP3	PJ
AP4	PK
TVC	TQ
TV1	TV
TV2	TW

TARIFF BRANCH
RECEIVED
7/17/2006
PUBLIC SERVICE
COMMISSION
OF KENTUCKY

ISSUED: JULY 17, 2006
BY: Vice President
Lexington, Kentucky

EFFECTIVE: AUGUST 1, 2006

ACCESS SERVICE

9. Interface Groups, Transmission Specifications and Channel Codes (Cont'd)

9.3 Channel Interface and Network Channel Codes (Cont'd)

9.3.4 Service Designator/Network Channel Code Conversion Table (Cont'd)

The purpose of this table is to show the relationship between the service designator codes (e.g. VGC, MT2, etc.) and the network channel codes that are used for various administrative purposes.

Service Designator Code	Network Channel Code
MTC	MQ
WA1	WJ
WA1T	WQ
WA2	WL
WA2A	WR
WA3	WN
WA4	WP
WD1	WB
WD2	WE
WD3	WF
DA1	XA
DA2	XB
DA3	XG
DA4	XH
HCO	HS
HC1	HC
HC1C	HD
HC2	HE
HC3	HF
HC4	HG

TARIFF BRANCH
RECEIVED
7/17/2006
PUBLIC SERVICE
COMMISSION
OF KENTUCKY

ISSUED: JULY 17, 2006
BY: Vice President
Lexington, Kentucky

EFFECTIVE: AUGUST 1, 2006

ACCESS SERVICE

9. Interface Groups, Transmission Specifications and Channel Codes (Cont'd)

9.3 Channel Interface and Network Channel Codes (Cont'd)

9.3.5 Compatible Channel Interfaces

The following tables show the channel interface codes (CIs) which are compatible:

(A) Metallic

Compatible CIs		Compatible CIs	
4AH5-B	2DC8-1	4AH6-D	2DC8-2
4AH5-B	24C8-2	2DC8-1	2DC8-2
4AH6-C	2DC8-1	2DC8-3	2DC8-3
4AH6-C	2DC8-2	4DS9-*	2DC8-1
4AH6-D	2DC8-1	4DS9-*	2DC8-2

(B) Telegraph Grade

Compatible CIs		Compatible CIs		Compatible CIs	
4AH5-B	10IA8	4AH6-D	4TT2-6	4DB2-43+	4TT2-2
4AH5-B	2TT2-2	2DB2-10	10IA8	4DS9-*	10IA8
4AH5-B	4TT2-2	2DB2-10	2TT2-2	4DS9-*	2TT2-2
4AH5-B	2TT2-6	2DB2-10	4TT2-2	4DS9-*	4TT2-2
4AH5-B	4TT2-6	2DB2-43+	10IA8	4DS9-*	2TT2-6
4AH6-C	10IA8	2DB2-43+	2TT2-2	4DS9-*	4TT2-6
4AH6-C	2TT2-2	2DB2-43+	2TT2-6	2TT2-2	2TT2-2
4AH6-C	4TT2-2	2DB2k-43+	4TT2-2	2TT2-3	2TT2-2
4AH6-C	2TT2-6	4DB2-10	10IA8	2TT2-3	4TT2-2
4AH6-C	4TT2-6	4DB2-10	2TT2-2	2TT2-6	2TT2-6
4AH6-D	10IA8	4DB2-10	4TT2-2	2TT2-6	4TT2-2
4AH6-D	2TT2-2	4DB2-43+	10IA8	4TT2-2	4TT2-2
4AH6-D	4TT2-2	4DB2-43+	2TT2-6	4TT2-6	2TT2-6
4AH6-D	2TT2-6				

* See Section 7.5.3 preceding for explanation.

+ Supplemental Channel Assignment information required.

TARIFF BRANCH
RECEIVED
7/17/2006
PUBLIC SERVICE
COMMISSION
OF KENTUCKY

ISSUED: JULY 17, 2006
BY: Vice President
Lexington, Kentucky

EFFECTIVE: AUGUST 1, 2006

ACCESS SERVICE

9. Interface Groups, Transmission Specifications and Channel Codes (Cont'd)

9.3 Channel Interface and Network Channel Codes (Cont'd)

9.3.5 Compatible Channel Interfaces (Cont'd)

(C) Voice Grade

Compatible CIs		Compatible CIs		Compatible CIs	
4AB2	4AB2				
4AB2	4AC2	4AH5-B	6DA2	4AH6-D	2DY2
4AB3	4AC2	4AH5-B	4DA2	4AH6-C	9DY2
4AB2	2AC2	4AH5-B	2DA2	4AH6-C	9DY3
4AB3	2AC2			4AH6-C	6DY2
2AB2	2AC2	4AH6-D	4DE2	4AH6-C	6DY3
2AB3	2AC2	4AH6-C	4DE2	4AH6-C	4DY2
		4AH5-B	4DE2	4AH6-C	2DY2
4AB2	4SF2	4AH6-D	2DE2	4AH5-B	9DY2
4AB3	4SF2	4AH6-C	2DE2	4AH5-B	9DY3
		4AH5-B	2DE2	4AH5-B	6DY2
4AH6-D	4AC2			4AH5-B	6DY3
4AH6-D	2AC2	4AH6-D	4DX3	4AH5-B	4DY2
4AH6-C	4AC2	4AH6-C	4DX3	4AH5-B	2DY2
4AH6-C	2AC2	4AH5-B	4DX3		
4AH5-B	4AC2	4AH6-D	4DX2	4AH6-D	9EA2
4AH5-B	2AC2	4AH6-C	4DX2	4AH6-D	9EA3
		4AH5-BBB	4DX2	4AH6-D	6EA2-E
4AH6-D	2CT3			4AH6-D	6EA2-M
				4AH6-D	4EA2-E
4AH6-C	2CT3			4AH6-D	4EA2-M
4AH5-B	2CT3			4AH6-C	9EA2
4AH6-D	6DA2			4AJ7-C	9EA3
4AH6-D	4DA2	4AH6-D	9DY2	4AH6-C	6EA2-E
4AH6-D	2DA2	4AH6-D	9DY3		
4AH6-C	6DA2	4AH6-D	6DY2		
4AH6-C	4DA2	4AH6-D	6DY3		
4AH6-C	2DA2	4AH6-D	4DY2		

TARIFF BRANCH
RECEIVED
7/17/2006
PUBLIC SERVICE
COMMISSION
OF KENTUCKY

ISSUED: JULY 17, 2006
BY: Vice President
Lexington, Kentucky

EFFECTIVE: AUGUST 1, 2006

ACCESS SERVICE

9. Interface Groups, Transmission Specifications and Channel Codes (Cont'd)

9.3 Channel Interface and Network Channel Codes (Cont'd)

9.3.5 Compatible Channel Interfaces (Cont'd)

(C) Voice Grade (Cont'd)

Compatible CIs		Compatible CIs		Compatible CIs	
4AH6-C	6EA2-M	4AH6-D	6GS2	4AH6-D	2L02
4AH6-C	4EA2-E	4AH6-D	4GS2	4AH6-C	2L03
4AH6-C	4EA2-M	4AH6-D	2GS3	4AH6-C	2L02
4AH5-B	9EA2	4AH6-D	2GS2	4AH5-B	2L03
4AH5-B	9EA3	4AH6-C	6GS2	4AH5-B	2L02
4AH5-B	6EA2-E	4AH6-c	4AGS2		
4AH5-B	6EA2-M	4AH6-C	2GS3	4AH6-B	4LR2
4AH5-B	4EA2-E	4AH6-C	2GS2	4AH6-D	2LR2
4AH5-B	4EA2-M	4AH5-B	6GS2	4AH6-C	4LR2
		4AH5-B	4GS2	4AH6-C	2LR2
4AH6-D	8EB2-E	4AH5-B	2GS3	4AH5-B	4LR2
4AH6-D	8EB2-M	4AH5-B	2GS2	4AH5-B	2LR2
4AH6-D	6EB2-E				
4AH6-D	6EB2-M	4AH6-D	2LA2	4AH6-D	6LS2
4AH6-C	8EB2-E	4AH6-C	2LA2	4AH6-D	4LS2
4AH6-C	8EB2-M	4AH5-B	2LA2	4AH6-D	2LS2
4AH6-C	6EB2-E			4AH6-D	2LS3
4AH6-C	6EB2-E			4AH6-D	2LS3
4AH6-C	6EB2-M	4AH6-D	2LB2	4AH6-C	6LS2
4AH5-B	8EB2-E	4AHG-C	2LB2	4AH6-C	4LS2
4AH5-B	8EB2-M	4AH5-B	2LB2	4AH6-C	2LS2
4AH5-B	6EB2-E			4AH6-C	2LS3
4AH5-B	6EB2-M	4AH6-D	2LC2	4AH5-B	6LS2
		4AH6-C	2LC2	4AH5-B	4LS2
4AH6-D	2G02	4AH5-B	2LC2	4AH5-B	2LS2
4AH6-D	2G03				
4AH6-C	2G02				
4AH6-C	2G02			4AH5-B	2LS3
4AH5-B	2G02	4AH6-D	2LO3		
4AH5-B	2GO3				

TARIFF BRANCH
RECEIVED
7/17/2006
PUBLIC SERVICE
COMMISSION
OF KENTUCKY

ISSUED: JULY 17, 2006
BY: Vice President
Lexington, Kentucky

EFFECTIVE: AUGUST 1, 2006

ACCESS SERVICE

9. Interface Groups, Transmission Specifications and Channel Codes (Cont'd)

9.3 Channel Interface and Network Channel Codes (Cont'd)

9.3.5 Compatible Channel Interfaces (Cont'd)

(C) Voice Grade (Cont'd)

Compatible CIs		Compatible CIs		Compatible CIs	
4AH6-D	4NO2	4AH6-D	4TF2	2CT3	8EB2-E
4AH6-D	2NO2	4AJ7-D	2TF2	2CT3	8EB2-M
4AH6-C	4NO2	4AH6-C	4TF2		
4AH6-C	2NO2	4AH6-C	2TF2	2CT3	6482-E
4AH5-B	4NO2	4AH5-B	4TF2	2CT3	6EB2-M
4AH5-B	2NO2	4AH5-B	2TF2		
				2CT3	6EB3-E
		2CT3	4DS9-*		
				2CT3	8EC2
		2CT3	6DX2		
		2CT3	4DX2	2CT3	4SF2
		2CT3	4DX3	2CT3	4SF3
4AH6-D	4PR2	2CT3	9DY3	6DA2	6DA2
4AH6-D	2PR2	2CT3	6DY3	6DA2	4DA2
4AH6-C	4PR2	2CT3	9DT2	4DA2	4DA2
4AH6-C	2PR2	2CT3	6DY2		
4AH5-B	4PR2	2CT3	4DY3	4DB2	6DA2
4AH5-B	2PR2	2CT3	2DY2	4DB2	4DA2
				4DB2	2DA2
4AH6-D	4RV2-T	2CT3	9EA3	2DB3	2DA2
4AH6-D	2RV2-T	2CT3	9EA2	2DB2	2DA2
4AH6-C	4RV2-T	2CT3	6EA2-E	4DB2	4DB2
4AH6-C	2RV2-T	2CT3	6EA2-M	4DB2	4NO2
4AH5-B	4TV2-T	2CT3	4EA2-E	4DB2	2NO2
4AH5-B	2RV2-T	2CT3	4EA2-M	2DB2	2NO2
4AH6-D	4SF2			4DB2	4PR2
4AH6-C	4SF2			4DB2	2PR2
4AH5-B	4SF2			2DB2	2PR2
4AH6-D	4SF3				
4AH6-C	4SF3				
4AH5-B	4SF3				

* See 9.3.3 preceding for explanation.

TARIFF BRANCH
RECEIVED
7/17/2006
PUBLIC SERVICE
COMMISSION
OF KENTUCKY

ISSUED: JULY 17, 2006
BY: Vice President
Lexington, Kentucky

EFFECTIVE: AUGUST 1, 2006

ACCESS SERVICE

9. Interface Groups, Transmission Specifications and Channel Codes (Cont'd)

9.3 Channel Interface and Network Channel Codes (Cont'd)

9.3.5 Compatible Channel Interfaces (Cont'd)

C) Voice Grade (Cont'd)

Compatible CIs		Compatible CIs	
4DD3	4DE2	4DS8-*	9DY3
4DD3	2DE2	4DS8-*	9DY2
		4DS8-*	6DY3
4DS8-*	4AC2	4DS8-*	6DY2
4DS8-*	2AC2	4DS8-*	4DY2
		4DS8-*	2DY2
4DS8-*	6DA2		
4DS8-*	4DA2		
4DS8-*	2DA2	4DS8-*	9EA2
		4DS8-*	9EA3
4DS8-*	4DE2	4DS8-*	6EA2-E
4DS8-*	EDE2	4DS8-*	6EA2-M
		4DS8-*	4EA2-E
4DS8-*	4DX3	4DS8-*	4EA2-E
4DS8-*	4DX2		

* See 9.3.3 preceding for explanation.

TARIFF BRANCH
RECEIVED
7/17/2006
PUBLIC SERVICE
COMMISSION
OF KENTUCKY

ISSUED: JULY 17, 2006
BY: Vice President
Lexington, Kentucky

EFFECTIVE: AUGUST 1, 2006

ACCESS SERVICE

9. Interface Groups, Transmission Specifications and Channel Codes (Cont'd)

9.3 Channel Interface and Network Channel Codes (Cont'd)

9.3.5 Compatible Channel Interfaces (Cont'd)

(C) Voice Grade (Cont'd)

Compatible CIs		Compatible CIs		Compatible CIs	
4DS8-*	8EB2-E	4DS8-*	4NO2	4DX3	9DY2
4DS8-*	8EB2-M	4DS8-*	2NO2	4DX2	6DY3
4DS8-*	6EB2-E			4DX3	6DY3
4DS8-*	6EB2-M	4DS8-*	4PR2	4DX2	6DY2
		4DS8-*	2PR2	4DX3	6DY2
4DS8-*	2GO2			4DX2	4DY2
4DS8-*	2GO3	4DS8-*	4RV2-T	4DX3	4DY2
4DS8-*	6GS2	4DS8-*	2RV2-T	4DX2	2DY2
4DS8-*	4GS2			4DX3	2DY2
4DS8-*	2GS2	4DS8-*	4SF2		
4DS8-*	2GS3	4DS8-*	4SF3	6DX2	9EA3
				6DX2	9EA2
4DS8-*	2LA2	4DS8-*	4TF2	6DX2	6EA2-E
		4DS8-*	2TF2	6DX2	6EA2-M
4DS8-*	2LB2			6DX2	4EA2-E
		4DX2	4DX2	6DX2	4EA2-M
4DS8-*	2LC2	4DX3	4DX2	4DX2	9EA2
		4DX3	4DX3	4DX3	9EA2
4DS8-*	2LO2			4DX2	9EA3
4DS8-*	2LO3	6DX2	9DY3	4DX3	9EA3
		6DX2	9DY2	4DX2	6EA2-E
4DS8-*	4LR2	6DX2	6DY3	4DX3	6EA2-E
4DS8-*	2LR2	6DX2	6DY2	4DX2	6EA2-M
		6DX2	4DY2	4DX3	6EA2-M
4DS8-*	6LS2	6DX2	2DY2	4DX2	4EA2-E
4DS8-*	4LS2	4DX2	9DY3	4DX3	4EA2-E
4DS8-*	2LS2	4DX3	9DY3	4DX2	4EA2-M
4DS8-*	2LS3	4DX2	9DY2	4DX3	4EA2-M

* See 9.3.3 preceding for explanation.

TARIFF BRANCH
RECEIVED
7/17/2006
PUBLIC SERVICE
COMMISSION
OF KENTUCKY

ISSUED: JULY 17, 2006
BY: Vice President
Lexington, Kentucky

EFFECTIVE: AUGUST 1, 2006

ACCESS SERVICE

9. Interface Groups, Transmission Specifications and Channel Codes (Cont'd)

9.3 Channel Interface and Network Channel Codes (Cont'd)

9.3.5 Compatible Channel Interfaces (Cont'd)

(C) Voice Grade (Cont'd)

Compatible CIs		Compatible CIs		Compatible CIs	
6DX2	8EB2-E	4DX2	6LS2	9DY2	6DY3
6DX2	8EB2-M	4DX3	6LS2	9DY3	4DY2
6DX2	6EB2-E	4DX3	4LS2	9DY2	4DY2
6DX2	6EB2-M	4DX2	4LS2	9DY2	2DY2
4DX2	8EB2-E	4DX3	2LS3	9DY3	2DY2
4DX2	8EB2-M	4DX2	2LS3	6DY3	6DY3
4DX3	8EB2-E	4DX3	2LS2	6DY3	6DY2
4DX3	8EV2-M	4DX2	2LS2	6DY2	6DY2
4DX2	6EB2-E	2DX3	2LS2	6DY3	4DY2
4DX2	6EB2-M	2DX3	2LS3	6DY3	2DY2
4DX3	6E82-E			6DY2	4DY2
4DX3	6EB2-M	4DX3	4RV2-T	6DY2	2DY2
		4DX2	4RV2-T	4DY2	2DY2
4DX2	2LA2	4DX3	2RV2-T	4DY2	4DY2
4DX3	2LA2	4DX2	2RV2-T		
2DX3	2LA2			6EA2-E	4AC2
		6DX2	4SF2	6EA2-M	4AC2
4DX2	2LB2	4DX2	4SF2	6EA2-E	2AC2
4DX3	2LB2	4DX3	4SF2	6EA2-M	2AC2
2DX3	2LB2	4DX2	4SF3		
	4DX3	4SF3	9EA2	9DY3	
4DX2	2LC2			9EA2	9DY2
4DX3	2LC2	9DY3	9DY3	9EA2	6DY3
2DX3	2LC2	9DY3	9DY2	9EA2	6DY2
		9DY2	9DY2	9EA2	4DY2
4DX2	2LO3	9DY3	6DY3	9EA2	2DY2
4DX3	2LO3	9DY3	6DY2	9EA3	9DY3
2DX3	2LO3	9DY2	6DY2		

TARIFF BRANCH
RECEIVED
7/17/2006
PUBLIC SERVICE
COMMISSION
OF KENTUCKY

ISSUED: JULY 17, 2006
BY: Vice President
Lexington, Kentucky

EFFECTIVE: AUGUST 1, 2006

ACCESS SERVICE

9. Interface Groups, Transmission Specifications and Channel Codes (Cont'd)

9.3 Channel Interface and Network Channel Codes (Cont'd)

9.3.5 Compatible Channel Interfaces (Cont'd)

(C) Voice Grade (Cont'd)

Compatible CIs		Compatible CIs		Compatible CIs	
9EA3	9DY2	4EA2-M	9DY2	4EA3-E	9EA2
9EA3	6DY3	4EA2-M	6DY3	4EA3-E	9EA3
9EA3	6DY2	4EA2-M	6DY2	4EA2-M	4EA2-M
9EA3	4DY2	4EA2-M	4DY2		
9EA3	2DY2	4EA2-M	2DY2	9EA2	8EB2-E
6EA2-E	9DY3			9EA2	8EB2-M
6EA2-E	9DY2	9EA2	9EA2	9EA2	6EB2-E
6EA2-E	6DY3	9EA2	9EA3	9EA2	6EB2-M
6EA2-E	6DY2	9EA2	6EA2-E	9EA3	8EB2-E
6EA2-E	4DY2	9EA2	6EA2-M	9EA3	8E82-M
6EA2-E	2DY2	9EA2	4EA2-E	9EA3	6EB2-E
6EA2-M	9DY3	9EA2	4EA2-M	9EA3	6EB2-M
6EA2-M	9DY2	9EA3	9EA3	6EA2-E	8EB2-E
6EA2-M	6DY3	9EA3	6EA2-E	6EA2-E	8EB2-M
6EA2-M	6DY2	9EA3	6EA2-M	6EA2-E	6EB2-E
6EA2-M	4DY2	9EA3	4EA2-E	6EA2-E	6EB2-M
6EA2-M	2DY2	9EA3	4EA2-M	6EA2-M	8EB2-E
4EA2-E	9DY3	6EA2-E	6EA2-E	6EA2-M	8E82-M
4EA2-E	9DY2	6EA2-E	6EA2-M	6EA2-M	6EB2-E
4EA3-E	9DY3	6EA2-M	6EA2-M	6EA2-M	6EB2-M
4EA3-E	9DY2	6EA2-E	4EA2-E	4EA2-E	8EB2-E
4EA3-E	6DY3	6EA2-E	4EA2-M	4EA2-E	8EB2-M
4EA3-E	6DY2	6EA2-M	4EA2-E	4EA3-E	8EB2-E
4EA3-E	4DY2	6EA2-M	4EA2-M	4EA3-E	8E82-M
4EA3-E	2DY2	4EA2-E	4EA2-E	4EA2-E	6EB2-E
4EA2-E	6DY3	4EA3-E	6EA2-E	4EA2-E	6EB2-M
4EA2-E	6DY2	4EA3-E	6EA2-M	4EA3-E	6EB2-E
4EA2-E	4DY2	4EA3-E	4EA2-E	4EA3-E	6EB2-M
4EA2-E	2DY2	4EA3-E	4EA2-M	4EA2-M	8EB2-E
4EA2-M	9DY3	4EA2-E	4EA2-M		

TARIFF BRANCH
RECEIVED
7/17/2006
PUBLIC SERVICE
COMMISSION
OF KENTUCKY

ISSUED: JULY 17, 2006
BY: Vice President
Lexington, Kentucky

EFFECTIVE: AUGUST 1, 2006

ACCESS SERVICE

9. Interface Groups, Transmission Specifications and Channel Codes (Cont'd)

9.3 Channel Interface and Network Channel Codes (Cont'd)

9.3.5 Compatible Channel Interfaces (Cont'd)

(C) Voice Grade (Cont'd)

Compatible CIs		Compatible CIs		Compatible CIs	
4EA2-M	8EB2-M	9EA3	43F2	6EB3-E	9DY2
4EA2-M	6EB2-E	9EA2	4SF2	6EB3-E	9DY3
4EA2-M	6EB2-M	6EA2-E	4SF3	6EB2-E	6DY2
		6EA2-M	4SF3	6EB3-E	6DY2
6EA2-E	2LA2	6EA2-E	4SF2	6EB2-E	6DY3
6EA2-M	2LA2	6EA2-M	4SF2	6EB3-E	6DY3
		4EA3-E	4SF2	6EB2-E	4DY2
6EA2-E	2LB2	4EA2-E	4SF2	6EB3-E	2DY2
6EA2-M	2LB2	4EA2-M	4SF2	6EB3-E	4DY2
				6EB2-M	9DY2
6EA2-E	2LC2	8EB2-E	4AC2	6EB2-M	9DY3
6EA2-M	2LC2	8EB2-M	4AC2	6EB2-M	6DY2
		8EB2-E	2AC2	6EB2-M	6DY3
6EA2-E	2LO3	8EB2-M	2AC2	6EB2-M	4DY2
6EA2-M	2LO3			6EB2-E	2DY2
		8EB2-E	9DY3	6EB2-M	2DY2
6EA2-E	6LS2	8EB2-E	9DY2		
6EA2-M	6LS2	8EB2-E	6DY3	6EB3-E	9EA2
6EA2-E	4LS2	8EB2-E	6DY2	6EB3-E	9EA3
6EA2-M	4LS2	8EB2-E	4DY2	6EB3-E	6EA2-E
6EA2-E	2LS2	8EB2-E	2DY2	6EB3-E	6EA2-M
6EA2-M	2LS2	8EB2-M	9DY3	6EB3-E	4EA2-E
6EA2-E	2LS3	8EB2-M	9DY2	6EB3-E	4EA2-M
6EA2-M	2LS3	8EB2-M	6DY3		
		8EB2-M	6DY2	8EB2-E	8EB2-E
6EA2-E	4RV2-T	8EB2-M	4DY2	8EB2-E	8EB2-M
6EA2-M	4RV2-T	8EB2-M	2DY2	8EB2-M	8EB2-M
6EA2-E	2RV2-T	6EB2-E	9DY2	8EB2-E	6EB2-E
6EA2-M	2RV2-T	6EB2-E	9DY3	8EB2-E	6EB2-M

TARIFF BRANCH
RECEIVED
7/17/2006
PUBLIC SERVICE
COMMISSION
OF KENTUCKY

ISSUED: JULY 17, 2006
BY: Vice President
Lexington, Kentucky

EFFECTIVE: AUGUST 1, 2006

ACCESS SERVICE

9. Interface Groups, Transmission Specifications and Channel Codes (Cont'd)

9.3 Channel Interface and Network Channel Codes (Cont'd)

9.3.5 Compatible Channel Interfaces (Cont'd)

(C) Voice Grade (Cont'd)

Compatible CIs		Compatible CIs		Compatible CIs	
8EB2-M	6EB2-E	8EB2-E	4RV2-T	8EC2	8EB2-M
8EB2-M	6EB2-M	8EB2-M	4RV2-T	8EC2	6EB2-E
6EB2-E	6EB2-E	8EB2-E	2RV2-T	8EC2	6EB2-M
6EB2-E	6EB2-M	8EB2-M	2RV2-T		
6EB3-E	8EB2-E			8EC2	4SF2
6EB3-E	8EB2-M	8EB2-E	4SF2	6EX2-B	2GO3
6EB2-M	6EB2-M	8EB2-M	4SF2	6EX2-A	6GS2
		8EB2-E	4SF3	6EX2-A	4GS2
8EB2-E	2LA2	8EB2-M	4SF3	6EX2-A	2GS2
8EB2-M	2LA2	6EB3-E	4SF2	6EX2-A	2GS3
		6EB2-E	4SF2		
8EB2-E	2LB2	6EB2-M	4SF2	6EX2-B	2LA2
8EB2-M	2LB2				
		8EC2	9DY2	6EX2-B	2LB2
8EB2-E	2LC2	8EC2	9DY3		
8EB2-M	2LC2	8EC2	6DY2	6EX2-B	2LC2
		84C2	6DY3		
8EB2-E	2LO3	8EC2	4DY2	6EX2-B	2LO2
8EB2-M	2LO3	8EC2	2DY2	6EX2-B	2LO3
8EB2-E	6LS2	8EC2	9EA2	6EX2-B	4LR2
8EB2-M	6LS2	8EC2	9EA3	6EX2-B	2LR2
8EB2-E	4LS2	8EC2	6EA2-E		
8EB2-M	4LS2	8EC2	6EA2-M	6EX2-A	6LS2
8EB2-E	2LS2	8EC2	4EA2-E	6EX2-A	4LS2
8EB2-M	2LS2	8EC2	4EA2-M	6EX2-A	2LS2
8EB2-E	2LS3			6EX2-A	2LS3
8EB2-M	2LS3	8EC2	8EB2-E		

TARIFF BRANCH
RECEIVED
7/17/2006
PUBLIC SERVICE
COMMISSION
OF KENTUCKY

ISSUED: JULY 17, 2006
BY: Vice President
Lexington, Kentucky

EFFECTIVE: AUGUST 1, 2006

ACCESS SERVICE

9. Interface Groups, Transmission Specifications and Channel Codes (Cont'd)

9.3 Channel Interface and Network Channel Codes (Cont'd)

9.3.5 Compatible Channel Interfaces (Cont'd)

(C) Voice Grade (Cont'd)

Compatible CIs		Compatible CIs		Compatible CIs	
6EX2-A	4SF2	6LO2	6LS2	4LR2	4SF2
6EX2-B	4SF2	6LO2	4LS2	4LR3	4SF2
		6LO2	2LS2		
6GO2	6GS2	6LO2	2LS3	6LS2	2LA2
6GO2	4GS2	4LO2	6LS2	4LS2	2LA2
6GO2	2GS2	4LO2	4LS2	4LS3	2LA2
6GO2	2GS3	4LO3	6LS2	2LS2	2LA2
4GO2	6GS2	4LO3	4LS2	2LS3	2LA2
4GO3	6GS2	4LO3	2LS3		
4GO2	4GS2	4LO3	2LS2	6LS2	2LB2
4GO3	4GS2	4LO2	2LS2	4LS2	2LB2
4GO2	2GS2	4LO2	2LS3	4LS3	2LB2
4GO2	2GS3	2LO3	2LS3	2LS2	2LB2
4GO3	2GS2	2LO3	2LS2	2LS3	2LB2
4GO3	2GS3	2LO2	2LS2		
2GO2	2GS2	2LO2	2LS3	6LS2	2LC2
2GO3	2GS2			4LS2	2LC2
2GO2	2GS3	6LO2	4SF2	4LS3	2LC2
2GO3	2GS3	4LO2	4SF2	2LS2	2LC2
		4LO3	4SF2	2LS3	2LC2
6GO2	4SF2				
4GO2	4SF2	4LR2	4LR1	6LS2	2LO3
4GO3	5SF2	4LR3	2LR2	6LS2	2LO2
		4LR2	4LR2	4LS2	2LO2
6GS2	2GO2	4LR2	2LR2	4LS2	2LO3
4GS2	2GO2	4LR2	2LR2	4LS3	2LO2
4GS3	2GO2	2LR3	2LR2	4LS3	2LO3
4GS2	2GO3				

TARIFF BRANCH
RECEIVED
7/17/2006
PUBLIC SERVICE
COMMISSION
OF KENTUCKY

ISSUED: JULY 17, 2006
BY: Vice President
Lexington, Kentucky

EFFECTIVE: AUGUST 1, 2006

ACCESS SERVICE

9. Interface Groups, Transmission Specifications and Channel Codes (Cont'd)

9.3 Channel Interface and Network Channel Codes (Cont'd)

9.3.5 Compatible Channel Interfaces (Cont'd)

(C) Voice Grade (Cont'd)

Compatible CIs		Compatible CIs		Compatible CIs	
6LS2	4SF2	4SF3	9DY2	4SF3	2LA2
4LS3	4SF2	4SF2	9DY3		
		4SF3	6DY3	4SF2	2LB2
4NO2	6DA2	4SF2	6DY3	4SF3	2LB2
4NO2	4DA2	4SF2	6DY3		
4NO2	2DA2	4SF3	6DY2	4SF2	2LC2
2NO2	2DA2	4SF2	4DY2	4SF3	2LC2
		4SF3	4DY2		
4NO2	4DE2	4SF3	2DY2	4SF2	2LO3
4NO2	2DE2	4SF2	2DY2	4SF3	2LO3
4NO2	4NO2	4SF3	9EA2	4SF2	2LR2
4NO2	2NO2	4SF3	9EA3	4SF3	4LR2
2NO2	2NO2	4SF3	4EA2-E	4SF3	2LR2
2NO3	2NO2	4SF3	4EA2-M		
				4SF3	6LS2
2NO3	2PR2	4SF3	6EB2-E	4SF2	4LS2
		4SF3	6EB2-M	4SF3	4LS2
4RV2-O	4RV2-T	4SF3	2GO3	4SF2	2LS2
4RV2-O	2RV2-T	4SF3	6GS2	4SF2	2LS3
4RV2-O	2RV2-T	4SF2	6GS2	4SF3	2LS2
		4SF2	6GS2	4SF3	2LS3
4RV2-O	4SF2	4SF3	4GS2		
		4SF2	2GS2	4SF3	4RV2-T
4SF2	4AC2	4SF2	2GS3	4SF2	4RV2-T
4SF2	2AC2	4SF3	2GS2	4SF2	2RV2-T
		4SF3	2GS3	4SF3	2RV2-T
4SF3	9DY3				
4SF2	9DY2	4SF2	2LA2	4SF3	4SF3

TARIFF BRANCH
RECEIVED
7/17/2006
PUBLIC SERVICE
COMMISSION
OF KENTUCKY

ISSUED: JULY 17, 2006
BY: Vice President
Lexington, Kentucky

EFFECTIVE: AUGUST 1, 2006

ACCESS SERVICE

9. Interface Groups, Transmission Specifications and Channel Codes (Cont'd)

9.3 Channel Interface and Network Channel Codes (Cont'd)

9.3.5 Compatible Channel Interfaces (Cont'd)

(C) Voice Grade (Cont'd)

Compatible CIs

4SF3 4SF2
4SF2 4SF2

4TF2 4TF2
4TF2 2TF2
2TF3 2TF2

(D) Program Audio

Compatible CIs		Compatible CIs		Compatible CIs	
4AH5-B	2PG1-3	4AH6-D	2PG1-3	4DS8-15F	2PG2-5
4AH5-B	2PG1-5	4AH6-D	2PG1-3	4DS8-15G	2PG2-8
4AH5-B	2PG1-8	4AH6-D	2PG1-8	4DS8-15H	2PG2-1
4AH5-B	2PG2-3	4AH6-D	2PG2-3	2PG2-1	2PG1-1
4AH5-B	2PG2-5	4AH6-D	2PG2-5	2PG2-1	2PG2-1
4AH5-B	2PG2-8	4AH6-D	2PG2-8	2PG2-3	2PG1-3
4AH6-C	2PG1-3	4DS8-15E	2PG1-3	2PG2-3	2PG2-3
4AH6-C	2PG1-5	4DS8-15F	2PG1-5	2PG2-5	2PG1-5
4AH6-C	2PG1-8	4DS8-15G	2PG1-8	2PG2-5	2PG2-5
4AH6-C	2PG2-3	4DS8-15H	2PG1-1	2PG2-8	2PG1-8
8AH6-C	2PG2-5	4DS8-15E	2PG2-3	2PG2-8	2PG2-8

TARIFF BRANCH
RECEIVED
7/17/2006
PUBLIC SERVICE
COMMISSION
OF KENTUCKY

ISSUED: JULY 17, 2006
BY: Vice President
Lexington, Kentucky

EFFECTIVE: AUGUST 1, 2006

ACCESS SERVICE

9. Interface Groups, Transmission Specifications and Channel Codes (Cont'd)

9.3 Channel Interface and Network Channel Codes (Cont'd)

9.3.5 Compatible Channel Interfaces (Cont'd)

(E) Video

Compatible CIs	
2TV6-1	4TV6-15
	4TV7-15
2TV6-2	6TV6-15
	6TV7-15
2TV7-1	4TV6-15
	4TV7-15
2TV7-2	6TV6-15
	6TV7-15
4TV6-5	4TV6-5
4TV6-15	4TV6-15
	4TV7-15

Compatible CIs	
4TV7-5	4TV6-5
	4TV7-5
4TV7-15	4TV6-15
	4TV7-15
6TV6-5	6TV6-5
	6TV7-5
6TV6-15	6TV6-15
	6TV7-15
6TV7-5	6TV6-5
4TV7-5	6TV7-5
6TV7-15	6TV6-15
	6TV7-15

(F) Wideband Analog

Compatible CIs	
4AH5-B	4AH5-B
4AH6-C	4AH5-B
4AH6-C	4AH6-C
	4AH6-D
	4AH6-D
	4AH6-C

Compatible CIs	
4AH6-D	4AH6-D
4AH5-B	4AH5-B
4AH6-C	4AH5-B
4DU8-A,B, or C	
4AH6-D	4DU8-A,B, or C

Compatible CIs	
4WD5-I	4WA5-1
4WD5-2	4WA5-I
4WD5-3	4WA5-2
4DS8-15	
4DU8-A,B, or C	

(G) Wideband Data

Compatible CIs	
8WB5-18S	12WC6-18
8WB5-19A	1OWC6-19
8WB5-19S	12WC6-19

Compatible CIs	
8WB5-23A	1OWC6-23
8WB5-23S	12W6-23S
8WB5-40S	12W6-40

Compatible CIs	
8WB5-50A	10WC6-50
8WB5-50S	12WB6-50

TARIFF BRANCH
RECEIVED
7/17/2006
PUBLIC SERVICE
COMMISSION
OF KENTUCKY

ISSUED: JULY 17, 2006
BY: Vice President
Lexington, Kentucky

EFFECTIVE: AUGUST 1, 2006

ACCESS SERVICE

9. Interface Groups, Transmission Specifications and Channel Codes (Cont'd)

9.3 Channel Interface and Network Channel Codes (Cont'd)

9.3.5 Compatible Channel Interfaces (Cont'd)

(H) Digital Data

Compatible CIs		Compatible CIs		Compatible CIs	
			4DS8-15	6DU5-48	
4DS8-15	4DU8-15+	4DS8-15	6DU5-56	4DU5-96	4DU5-96
4DS8-15	4DU8-24	4DS8-15	6DU5-96	6DU5-24	6DU5-24
4DS8-15	4DU8-48	4DU5-24	4DU5-24	6DU5-48	6DU5-48
4DS8-15	4DU8-56	4DU5-48	4DU5-48	6DU5-56	6DU5-56
4DS8-15	6DU5-96	4DU8-56	4DU5-56	6DU5-96	6DU5-96
4DS8-15	6DU5-24				

+ Available only as a cross connect of two digital circuits as appropriate digital speeds at a Company hub.

(I) High Capacity

Compatible CIs		Compatible CIs	
		4DS8-15	4DU8-8
4DS0-63	4DSO-63	4DS8-15J	6DU8-A
4DS0-63	4DU8-A,B or C	4DS8-15J	4DU8-A
4DS0-63	4DU8-A,B or C	4DS8-15K	6DU8-B
4DS6-27	4DS6-27	4DS8-15K	4DU8-B
4DS6-27	6DU8-A,B, or C	4DS8-15K	6DU8-C
4DS6-27	4DU8-A,B, or C	4DS8-15K	4D78-C
4DS6-44	4DS6-44	4DS9-31	4DS9-31
4DS6-44	6DU8-A,B, or C	4DS9-31	6DU8-A,B, or C
4DS6-44	4DU8-A,B, or C	4DS9-4DU8-A,B, or C	
4DS8-15	4DS8-15+	4DU9-A,B or C	4DU8-A,B, or C
4DS8-15	6DU8-B		

+ Available only as a cross connect of two individual circuits of 1.544 Mbps facilities at a Company hub.

TARIFF BRANCH
RECEIVED
7/17/2006
PUBLIC SERVICE
COMMISSION
OF KENTUCKY

ISSUED: JULY 17, 2006
BY: Vice President
Lexington, Kentucky

EFFECTIVE: AUGUST 1, 2006

ACCESS SERVICE

10. Special Federal Government Access Services

10.1 General

This section covers Special Access Services that are provided to a customer for use only by agencies or branches of the Federal Government and other users authorized by the Federal Government. Services provided to state emergency operations centers are included. These services provide for command and control communications, including communications for national security, emergency preparedness and presidential requirements. They are required to assure continuity of Government in emergency and crisis situations and to provide for national security.

Services for command and control communications and for national security and emergency preparedness sometimes require short notice and short duration service provisions. These provisions are especially needed to meet presidential requirements or in response to natural, man-made, or declared emergencies. Requirements of this type cannot be forecasted and are usually needed for a relatively short period. The provision of service under these conditions may require the availability of facilities, such as portable microwave equipment, which are provided on a temporary basis by the Company or customer.

TARIFF BRANCH
RECEIVED
7/17/2006
PUBLIC SERVICE
COMMISSION
OF KENTUCKY

ISSUED: JULY 17, 2006
BY: Vice President
Lexington, Kentucky

EFFECTIVE: AUGUST 1, 2006

ACCESS SERVICE

10. Special Federal Government Access Services (Cont'd)

10.2 Emergency Conditions

These services will be provided on the date requested or as soon as possible thereafter when the emergency falls into one of the following categories:

- State of crisis declared by the National Command Authorities (includes commitments made to the National Communications System in the "National Plan for Emergencies and Major Disasters").

- Efforts to protect endangered U.S. personnel or property both in the U.S. and abroad. (Includes space vehicle recovery and protection efforts.)

- Communications requirements resulting from hostile action, a major disaster or a major civil disturbance.

- The director (Cabinet level) of a Federal department, Commander of a Unified/Specified Command, or head of a military department has certified that a communications requirement is so critical to the protection of life and property or to the National Defense that it must be processed immediately.

- Political unrest in foreign countries which affect the national interest.

- Presidential service.

TARIFF BRANCH
RECEIVED
7/17/2006
PUBLIC SERVICE
COMMISSION
OF KENTUCKY

ISSUED: JULY 17, 2006
BY: Vice President
Lexington, Kentucky

EFFECTIVE: AUGUST 1, 2006

ACCESS SERVICE

10. Special Federal Government Access Services (Cont'd)

10.3 Intervals to Provide Service

Services provided under the provisions of this section of the tariff are provided on an individual case basis. Therefore, orders for such service shall be placed under the Negotiated Interval provisions set forth in Section 5.1.7 preceding.

10.4 Safeguarding of Service

10.4.1 Facility Availability

In order to insure communications during periods of emergency, the Company will, within the limits of good management, make available the necessary facilities to restore service in the event of damage or to provide temporary emergency service.

In order to meet the requirements of agencies or branches of the Federal Government, the Company may utilize government-owned facilities, when necessary to provide service.

10.5 Federal Government Regulations

In accordance with Federal Government Regulations, all service provided to the Federal Government will be billed in arrears. However, this provision does not apply to other customers that obtain services under the provisions of this tariff to provide their services to the Federal Government.

TARIFF BRANCH
RECEIVED
7/17/2006
PUBLIC SERVICE
COMMISSION
OF KENTUCKY

ISSUED: JULY 17, 2006
BY: Vice President
Lexington, Kentucky

EFFECTIVE: AUGUST 1, 2006

ACCESS SERVICE

10. Special Federal Government Access Services (Cont'd)

10.6 Service Offerings to the Federal Government

The following unique services are provided to a customer for use only by agencies or branches of the Federal Government, other authorized users and state emergency operations centers. The rates and charges for these services shall be developed on an individual case basis and shall be consistent with the rates and charges for services offered in other sections of this tariff.

10.6.1 Type and Description

(A) Voice Grade Special Access Services

(1) Voice Grade Secure Communications Type I

Approximate bandwidth of 10-50,000 Hertz. Furnished for two-point secure communications on two-wire or four-wire metallic facilities between an IC premises and an end user's premises. Services are conditioned as follows:

T-3 Conditioning - The absolute loss (referenced to 1 milliwatt) with respect to frequency shall not exceed:

15 dB at 10 Hz
13 dB at 100 Hz
9 dB at 1,000 Hz
20 dB at 10,000 Hz
30 dB at 50,000 Hz

Additional conditioning (available in one or two directions on four-wire facilities only) to provide the following characteristics:

The absolute loss (referenced to one milliwatt) with respect to frequency shall not exceed:

0 db at 1,000 Hz
± 1 dB between 1,000 Hz and 40,000 Hz
± 2 dB between 10 Hz and 50,000 Hz
(+ means more loss)

TARIFF BRANCH
RECEIVED
7/17/2006
PUBLIC SERVICE
COMMISSION
OF KENTUCKY

ISSUED: JULY 17, 2006
BY: Vice President
Lexington, Kentucky

EFFECTIVE: AUGUST 1, 2006

ACCESS SERVICE

10. Special Federal Government Access Services (Cont'd)

10.6 Service Offerings to the Federal Government (Cont'd)

10.6.1 Type and Description (Cont'd)

(A) Voice Grade Special Access Services (Cont'd)

(1) Voice Grade Secure Communications Type I (Cont'd)

The net loss of the conditioned service (with or without additional conditioning) shall not vary by more than four dB at 1,000 Hz from the levels specified above. Voice frequency signaling or supervisory tones can be transmitted.

(2) Voice Grade Secure Communications Type II

Approximate bandwidth 10-50,000 Hz. Furnished on four-wire metallic facilities for duplex operation for two-point secure communications between an IC premises on an end user's premises. Services are conditioned as follows:

G-1 Conditioning - The absolute loss with respect to frequency and the net loss variation shall be the same as Voice Grade Secure Communications Type I services without additional conditioning. Voice frequency signaling or supervisory tones can be transmitted.

(3) Voice Grade Secure Communications Type III

Approximate bandwidth 10-50,000 Hz. Furnished on four-wire metallic facilities for duplex operation for two-point secure communications between an IC premises switch and an end user's premises. Services are conditioned as follows:

G-2 Conditioning - The absolute loss with respect to frequency and the net loss variation from the switch to an end user's premises shall be the same as Voice Grade Secure Communications Type I services without additional conditioning; from an end user's premises to the switch shall be the same as Voice Grade Secure Communications Type I services with additional conditioning. Voice frequency signaling or supervisory tones can be transmitted.

TARIFF BRANCH
RECEIVED
7/17/2006
PUBLIC SERVICE
COMMISSION
OF KENTUCKY

ISSUED: JULY 17, 2006
BY: Vice President
Lexington, Kentucky

EFFECTIVE: AUGUST 1, 2006

ACCESS SERVICE

10. Special Federal Government Access Services (Cont'd)

10.6 Service Offerings to the Federal Government (Cont'd)

10.6.1 Type and Description (Cont'd)

(A) Voice Grade Special Access Services (Cont'd)

(4) Voice Grade Secure Communications Type IV

Approximate bandwidth 10-50,000 HZ. Furnished on four-wire metallic facilities for duplex operation for two-point secure communication between two IC premises switches. Services are conditioned as follows:

G-3 Conditioning - The absolute loss with respect to frequency and the net loss variation shall be the same in both directions of transmission as Voice Grade Secure Communications Type I services with additional conditioning. Voice frequency signaling or supervisory tones can be transmitted.

(B) Wideband Digital Special Access Service

Service arrangements for secured communications to accommodate the transmission of binary digital baseband signals in a random polar format.

(1) Wideband Secure Communications Type I

For transmission at the rate of 18,750 bits per second.

(2) Wideband Secure Communications Type II

For transmission at the rate of 50,000 bits per second.

(3) Wideband Secure Communications Type III

To accommodate the transmission of restored polar two-level facsimile signals with a minimum signal element width of twenty microseconds at a rate of 50,000 bits per second.

TARIFF BRANCH
RECEIVED
7/17/2006
PUBLIC SERVICE
COMMISSION
OF KENTUCKY

ISSUED: JULY 17, 2006
BY: Vice President
Lexington, Kentucky

EFFECTIVE: AUGUST 1, 2006

ACCESS SERVICE

10. Special Federal Government Access Services (Cont'd)

10.6 Service Offerings to the Federal Government (Cont'd)

10.6.1 Type and Description (Cont'd)

(B) Wideband Digital Special Access Service (Cont'd)

To accommodate the transmission of binary digital baseband signals in a random polar format at the rate of 50,000 bits per second.

(C) Special Routing Access Service

Special Routing Access Service is furnished only to AT&T Communications (AT&T-C) for an agency or branch of the Federal Government. This service provides the customer's end users the ability to originate and terminate calls to or from the customer's premises utilizing a Special Routing Plan.

This service is an optional service which operates in conjunction with Trunk Side Premium Access Service furnished to AT&T-C under other provisions of this tariff.

10.6.2 Mileage Application

Mileage, when used for rate application between two customer premises, shall be determined by the V and H Coordinates Method as set forth in NATIONAL EXCHANGE CARRIER ASSOCIATION TARIFF F.C.C. No. 4 and administered as set forth in Section 7.5.5 preceding.

TARIFF BRANCH
RECEIVED
7/17/2006
PUBLIC SERVICE
COMMISSION
OF KENTUCKY

ISSUED: JULY 17, 2006
BY: Vice President
Lexington, Kentucky

EFFECTIVE: AUGUST 1, 2006

ACCESS SERVICE

10. Special Federal Government Access Services (Cont'd)

10.6 Service Offerings to the Federal Government (Cont'd)

10.6.3 Rates and Charges

(A) Voice Grade Special Access Service

The provision of T-3 and G conditioned services contemplates station and tandem switching operations, using customer provided equipment, as well as Special Access Service. Separate narrowband or voice grade services, where required by the customer provided equipment or switching operation, are furnished in accordance with the applicable sections of this tariff.

Voice Grade Secure Communications	USOC	Monthly Rates	Nonrecurring Charges	Termination Charges
Type I, each T-3 Conditioning,	GCA++	ICB rates and charges apply		
Additional Conditioning, per service termination	GTO++	ICB rates and charges apply		
Type II, each G-1 Conditioning,	GCB++	ICB rates and charges apply		
Type III, each G-2 Conditioning,	GCC++	ICB rates and charges apply		
Additional Conditioning, per service termination	G20++	ICB rates and charges apply		
Type IV, each G-3 Conditioning,	GCD++	ICB rates and charges apply		
Additional Conditioning, per service termination	G3O++	ICB rates and charges apply		

TARIFF BRANCH
RECEIVED
7/17/2006
PUBLIC SERVICE
COMMISSION
OF KENTUCKY

ISSUED: JULY 17, 2006
BY: Vice President
Lexington, Kentucky

EFFECTIVE: AUGUST 1, 2006

ACCESS SERVICE

10. Special Federal Government Access Services (Cont'd)

10.6 Service Offerings to the Federal Government (Cont'd)

10.6.3 Rates and Charges (Cont'd)

(B) Wideband Digital Special Access Service

Wideband Secure Communications	USOC	Monthly Rates	Nonrecurring Charges	Termination Charges
Type I, each	GW1++	ICB rates and charges apply		
Type II, each	GW2++	ICB rates and charges apply		
Type III, each	GW3++	ICB rates and charges apply		

(C) Move Charges

(1) When service without a termination charge associated with it, as set forth in (A) and (B) preceding, is moved to a different building, the nonrecurring charge applies; when moved to a new location in the same building, a charge of one-half the nonrecurring charge applies.

(2) When service with a termination charge associated with it, as set forth in (A) and (B) preceding, is moved and is reinstalled at a new location, the customer may elect:

- to pay the unexpired portion of the termination charge for the service, if any, with the application of nonrecurring charge and the establishment of a new termination charge for such service at the new location, or

- to continue service subject to the unexpired portion of the termination charge, if any, and pay the estimated costs of moving such service, provided that the customer requests these charges be quoted prior to ordering the service move. Charges for moving such service will be based on estimated costs attributable to the move.

Move charges include the estimated costs of removal, restoration of services or facilities necessitated by the move, transportation, storage, reinstallation, engineering, labor, supervision, materials, administration, and any other specific items of cost directly attributable to the move.

TARIFF BRANCH
RECEIVED
7/17/2006
PUBLIC SERVICE
COMMISSION
OF KENTUCKY

ISSUED: JULY 17, 2006
BY: Vice President
Lexington, Kentucky

EFFECTIVE: AUGUST 1, 2006

ACCESS SERVICE

10. Special Federal Government Access Services

10.6 Service Offerings to the Federal Government (Cont'd)

10.6.3 Rates and Charges (Cont'd)

(D) Special Routing Access Services

The following rates and charges are in addition to all other rates and charges that may be applicable for other services that may be furnished under the provisions of this tariff to operate in conjunction with this service:

		USOC	Monthly Rates	Nonrecurring Charges
(1)	Special Routing Access Service Special Routing Plan Setup, per Switching System	GCD++	-	$ 200.00
(2)	Special Routing Access Service Trunk Group Setup, per End Office or Tandem Office, Switching System per occurrence	GID	-	1000.00
(3)	Special Routing Access Service Mode Selection (Active or Deactive), per Switching System per occurrence	GIE	-	200.00
(4)	Special Routing Access Service Maintenance and Administration, per Switching System per month*	GIM	$150.00	-

*This rate applies only to Switching Systems with this feature.

TARIFF BRANCH
RECEIVED
7/17/2006
PUBLIC SERVICE
COMMISSION
OF KENTUCKY

ISSUED: JULY 17, 2006
BY: Vice President
Lexington, Kentucky

EFFECTIVE: AUGUST 1, 2006

ACCESS SERVICE

11. Special Facilities Routing of Access Services

11.1 Description of Special Facilities Routing of Access Services

The services provided under this tariff are provided over such routes and facilities as the Telephone Company may elect. Special Facilities Routing is involved when, in order to comply with requirements specified by the customer, the Telephone Company provides Switched Access Service, Special Access Service or Special Federal Government Access Service in a manner which includes one or more of the following conditions:

11.1.1 Diversity

Two or more services must be provided over not more than two different physical routes.

11.1.2 Avoidance

A service must be provided on a route which avoids specified geographical locations.

11.1.3 Cable-Only Facilities

Certain Voice Grade services are provided on Cable-Only Facilities to meet the particular needs of a customer.

Service is provided subject to the availability of Cable-Only facilities. In the event of service failure, restoration will be made through the use of any available facilities as selected by the Telephone Company.

Avoidance and Diversity are available on Switched Access Service as set forth in Section 6. preceding; Special Access Services as set forth in 7. preceding and Special Federal Government Access Services as set forth in Section 10.6 preceding. Cable-Only Facilities are available for Switched Access Service as set forth in Section 6. preceding; Voice Grade Special Access Services as set forth in Section 7.5 preceding and Special Federal Government Access Services as set forth in Section 10.6 preceding.

In order to avoid the compromise of special routing information, the Telephone Company will provide the required routing information for each specially routed service to only the ordering customer. If requested by the customer, this information will be provided when service is installed and prior to any subsequent changes in routing.

TARIFF BRANCH
RECEIVED
7/17/2006
PUBLIC SERVICE
COMMISSION
OF KENTUCKY

ISSUED: JULY 17, 2006
BY: Vice President
Lexington, Kentucky

EFFECTIVE: AUGUST 1, 2006

ACCESS SERVICE

11. Special Facilities Routing of Access Services (Cont'd)

11.1 Description of Special Facilities Routing of Access Services (Cont'd)

The rates and charges for Special Facilities Routing of Access Services as set forth in Section 11.2 following are in addition to all other rates and charges that may be applicable for services provided under other sections of this tariff.

11.2 Rates and Charges for Special Facilities Routing of Access Service

The rates and charges for Special Facilities Routing of Access Services are as follows:

11.2.1 Diversity

For each service provided in accordance with Section 11.1.1 preceding, the rates and charges will be developed on an individual case basis and filed following:

USOC

SYD++

11.2.2 Avoidance

For each service provided in accordance with Section 11.1.2 preceding, the rates and charges will be developed on an individual case basis and filed following:

USOC

SYA++

TARIFF BRANCH
RECEIVED
7/17/2006
PUBLIC SERVICE
COMMISSION
OF KENTUCKY

ISSUED: JULY 17, 2006
BY: Vice President
Lexington, Kentucky

EFFECTIVE: AUGUST 1, 2006

ACCESS SERVICE

11. Special Facilities Routing of Access Services (Cont'd)

11.2 Rates and Charges for Special Facilities Routing of Access Service (Cont'd)

11.2.3 Diversity and Avoidance Combined

For each service provided in accordance with Sections 11.1.1 and 11.1.2 preceding, combined, the rates and charges will be developed on an individual case basis and filed following:

USOC

SYB++

11.2.4 Cable-Only Facilities

For each service provided in accordance with Section 11.1.3 preceding, the rates and charges will be developed on an individual case basis and filed following:

USOC

SYC++

TARIFF BRANCH
RECEIVED
7/17/2006
PUBLIC SERVICE
COMMISSION
OF KENTUCKY

ISSUED: JULY 17, 2006
BY: Vice President
Lexington, Kentucky

EFFECTIVE: AUGUST 1, 2006

ACCESS SERVICE

12 Specialized Service or Arrangements

12.1 General

Specialized Service or Arrangements may be provided by the Company, at the request of a customer, on an individual case basis if such service or arrangements meet the following criteria:

- The requested service or arrangements are not offered under other sections of this tariff.
- The facilities utilized to provide the requested service or arrangements are of a type normally used by the Company in furnishing its other services.
- The requested service or arrangements are provided within a LATA.
- The requested service or arrangements are compatible with other Company services, facilities, and its engineering and maintenance practices.
- This offering is subject to the availability of the necessary Company personnel and capital resources.

TARIFF BRANCH
RECEIVED
7/17/2006
PUBLIC SERVICE
COMMISSION
OF KENTUCKY

ISSUED: JULY 17, 2006
BY: Vice President
Lexington, Kentucky

EFFECTIVE: AUGUST 1, 2006

ACCESS SERVICE

13. Exceptions to Access Service Offerings

The service offered under the provisions of this tariff are subject to availability as set forth in Section 2.1.4 preceding. In addition, the following exceptions apply:

(Paragraphs 13.1 through 13.5 following are reserved for future listing. In the meantime, in planning an end-to-end service, the customer should contact the Company in each customer premises city to assure itself that all of the service or service components required for a given customer service are currently available).

13.1 The following service(s) is (are) not offered in the operating territory of listed Issuing Carriers.

(Reserved for future use)

13.2 The following offering(s) is (are) limited to existing locations. No inside moves, rearrangements or additions will be permitted.

(Reserved for future use)

13.3 The following offering(s) is (are) limited to existing locations. Inside moves or rearrangements may be undertaken. However, no additions will be permitted.

(Reserved for future use)

13.4 The following offering(s) is (are) limited to existing locations where additional units may be added for growth. Inside moves or rearrangements may be undertaken.

(Reserved for future use)

13.5 The following offering(s) is (are) limited to existing locations where additional units may be added for growth. However, inside moves or rearrangements will not be permitted.

(Reserved for future use)

TARIFF BRANCH
RECEIVED
7/17/2006
PUBLIC SERVICE
COMMISSION
OF KENTUCKY

ISSUED: JULY 17, 2006
BY: Vice President
Lexington, Kentucky

EFFECTIVE: AUGUST 1, 2006

ACCESS SERVICE

14. (Reserved for Future Use)

TARIFF BRANCH
RECEIVED
7/17/2006
PUBLIC SERVICE
COMMISSION
OF KENTUCKY

ISSUED: JULY 17, 2006
BY: Vice President
Lexington, Kentucky

EFFECTIVE: AUGUST 1, 2006

ACCESS SERVICE

15. Special Construction

15.1 Application of Special Construction

This section contains regulations, rates, charges and liabilities applicable for the special construction of intrastate interLATA facilities provided by the Issuing Carriers of this tariff, hereinafter referred to as the Company.

15.2 Regulations

15.2.1 Filing of Charges

Rates, charges and liabilities for special construction to provide facilities for use for one month or more are filed in Section 3. and 4., following, as appropriate.

Rates, charges and liabilities for the construction of facilities for use for less than one month are filed in supplements to this tariff.

15.2.2 Ownership of Facilities

The Company providing specially constructed facilities under the provisions of this tariff retains ownership of all such facilities.

15.2.3 Interval to Provide Facilities

Based on available information and the type of service ordered, the Company will establish a completion date for the specially constructed facilities. If the scheduled completion date cannot be met due to circumstances beyond the control of the Company, a new completion date will be established and the customer will be notified.

15.2.4 Special Construction Involving Both Interstate and Intrastate Facilities

When special construction involves facilities to be used to provide both interstate and intrastate services, charges for the portion of the construction used to provide interstate service shall be in accordance with this tariff. Charges for the portion of the construction used to provide intrastate service shall be in accordance with the appropriate interstate tariff.

TARIFF BRANCH
RECEIVED
7/17/2006
PUBLIC SERVICE
COMMISSION
OF KENTUCKY

ISSUED: JULY 17, 2006
BY: Vice President
Lexington, Kentucky

EFFECTIVE: AUGUST 1, 2006

ACCESS SERVICE

15. Special Construction (Cont'd)

15.2 Regulations (Cont'd)

15.2.5 Payments for Special Construction

15.2.5.1 Payment of Charges

All bills associated with special construction charges are due in accordance with the regulations in the appropriate service tariff.

15.2.5.2 Start/End of Billing

Billing of recurring charges for specially constructed facilities starts on the day after the facilities are made available for use. Billing accrues through and includes the day that the specially constructed facilities are discontinued.

15.2.5.3 Credit Allowance for Service Interruptions

In the event of a service interruption involving a specially constructed facility, the customer shall receive a recurring monthly charge credit in accordance with the credit allowance provisions in the appropriate service tariff associated with the affected services.

When an interruption continues due to the failure of the customer to authorize the replacement of facilities subject to a Replacement Charge, as specified in 15.2.4(A)(4) following, the credit allowance will be terminated on the seventh calendar day after the Company has provided the customer with written notification of the need for replacement. The credit allowance will resume on the day after the Company receives written authorization for the replacement from the customer.

TARIFF BRANCH
RECEIVED
7/17/2006
PUBLIC SERVICE
COMMISSION
OF KENTUCKY

ISSUED: JULY 17, 2006
BY: Vice President
Lexington, Kentucky

EFFECTIVE: AUGUST 1, 2006

ACCESS SERVICE

15. Special Construction (Cont'd)

15.2 Regulations (Cont'd)

15.2.6 Liabilities and Charges for Special Construction

15.2.6.1 General

This section describes the various charges and liabilities that may apply when the Company provides special construction of facilities in accordance with an order for service. Written approval of all liabilities and charges must be provided to the Company prior to the start of construction.

15.2.6.2 Conditions Requiring Special Construction

Special construction is required when 1) facilities are not available to meet an order for service, and 2) the Company constructs facilities, and 3) one or more of the following conditions exist:

- The Company has no other requirement for the facilities requested.
- It is requested that service be furnished using a type of facility, or via a route, other than that which the Company would normally utilize in furnishing the requested service.
- More facilities are requested that would normally be required to satisfy an order.
- It is requested that construction be expedited resulting in added cost to the Company.

15.2.6.3 Development of Liabilities and Charges

Special construction charges and liabilities will be developed based on estimated costs, except when actual costs are requested in writing prior to the start of special construction.

In order to meet a scheduled date when actual costs are requested, an initial special construction filing may be made based on estimated costs. Such a filing will be revised when actual costs are available.

TARIFF BRANCH
RECEIVED
7/17/2006
PUBLIC SERVICE
COMMISSION
OF KENTUCKY

ISSUED: JULY 17, 2006
BY: Vice President
Lexington, Kentucky

EFFECTIVE: AUGUST 1, 2006

ACCESS SERVICE

15. Special Construction (Cont'd)

15.2 Regulations (Cont'd)

15.2.6 Liabilities and Charges for Special Construction (Cont'd)

15.2.6.4 Types of Liabilities and Charges

Depending on the specifics associated with each individual case, one or more of the following special construction charges and/or liabilities may be applicable:

(A) Nonrecurring Charge

A nonrecurring charge always applies and includes one or more of the following components:

(1) Case Preparation Charge

A nonrecurring charge always includes a case preparation charge component to cover the administrative expenses associated with preparing a special construction case and the associated tariff filing.

(2) Expediting Charge

A nonrecurring charge may include an expediting charge when it is requested that special construction be completed on an expedited basis. The charge equals the difference in estimated cost between expedited and nonexpedited construction.

(3) Optional Payment

An optional payment charge may be included in the nonrecurring charge in association with a type of facility or route other than that which the Company would normally use in furnishing the requested service if lower recurring monthly charges are desired for the specially constructed facilities. This charge is equal to the excess installed cost or the total nonrecoverable cost, whichever is less. This election must be made in writing before special construction starts. If this election is coupled with the actual cost option, the optional payment charge will reflect the actual cost of the specially constructed facilities.

TARIFF BRANCH
RECEIVED
7/17/2006
PUBLIC SERVICE
COMMISSION
OF KENTUCKY

ISSUED: JULY 17, 2006
BY: Vice President
Lexington, Kentucky

EFFECTIVE: AUGUST 1, 2006

ACCESS SERVICE

15. Special Construction (Cont'd)

15.2 Regulations (Cont'd)

15.2.6 Liabilities and Charges for Special Construction (Cont'd)

15.2.6.4 Types of Liabilities and Charges (Cont'd)

(A) Nonrecurring Charge (Cont'd)

(4) Replacement Charge

If any portion of specially constructed facilities for which an optional payment charge has been paid requires replacement involving capital investment, a replacement charge will apply. This charge will be in the same ratio to the total replacement cost as the initial optional payment charge was to the installed cost of the original specially constructed facilities. If any portion of the facilities subject to the replacement charge fails, service will not be restored until notification is provided in writing that replacement is required and such replacement is ordered.

(5) Rearrangement Charge

If the Company is requested to rearrange existing specially constructed facilities, a nonrecurring charge equal to the cost of any additional special construction will apply.

(6) Special Construction of Facilities for Use for less Than One Month

When the Company is requested to construct facilities to provide service for less than one month, a nonrecurring charge only applies. In addition to the case preparation charge component, this nonrecurring charge recovers all elements of cost, including engineering, shipping of equipment, equipment installation, line-up, equipment leasing, space rental, equipment removal, and any other costs associated with the construction of the facilities.

TARIFF BRANCH
RECEIVED
7/17/2006
PUBLIC SERVICE
COMMISSION
OF KENTUCKY

ISSUED: JULY 17, 2006
BY: Vice President
Lexington, Kentucky

EFFECTIVE: AUGUST 1, 2006

ACCESS SERVICE

15. Special Construction (Cont'd)

15.2 Regulations (Cont'd)

15.2.6 Liabilities and Charges for Special Construction (Cont'd)

15.2.6.4 Types of Liabilities and Charges (Cont'd)

(B) Maximum Termination Liability and Termination Charge

A Maximum Termination Liability is equal to the nonrecoverable costs associated with specially constructed facilities and is the maximum amount which could be applied as a Termination Charge if all specially constructed facilities were discontinued before the Maximum Termination Liability expires.

The liability period is equal to the average life of the account associated with the specially constructed facilities. The liability period is generally expressed in terms of an effective and expiration date.

The Maximum Termination Liability is filed with the initial tariff filing in decreasing amounts at ten-year intervals over the average account life of the facilities. In the event that the average account life of the facilities is not an even multiple of ten, the last increment will reflect the appropriate number of years remaining.

Example Illustrating a 27-Year Average Account Life

Maximum Termination Liability	Effective Date	Expiration Date
$10,000	6/1/84	6/1/94
7,000	6/1/94	6/1/04
3,000	6/1/04	6/1/11

Prior to the expiration of each liability period, the customer has the option to (A) terminate the special construction case and pay the appropriate charges, of (B) extend the use of the specially constructed facilities for the new liability period.

TARIFF BRANCH
RECEIVED
7/17/2006
PUBLIC SERVICE
COMMISSION
OF KENTUCKY

ISSUED: JULY 17, 2006
BY: Vice President
Lexington, Kentucky

EFFECTIVE: AUGUST 1, 2006

ACCESS SERVICE

15. Special Construction (Cont'd)

15.2 Regulations (Cont'd)

15.2.6 Liabilities and Charges for Special Construction (Cont'd)

15.2.6.4 Types of Liabilities and Charges (Cont'd)

(B) Maximum Termination Liability and Termination Charge (Cont'd)

The Company will notify the customer six months in advance of the expiration date of each ten-year liability period. The customer must provide the Company with written notification of at least 30 days prior to the expiration of the liability period if termination is elected. Failure to do so will result in an automatic extension of the special construction case to the next liability period at the filed Maximum Termination Liability amount.

A Termination Charge may apply when all services using specially constructed facilities which have a tariffed Maximum Termination Liability are discontinued prior to the expiration of the liability period. The charge reflects the unamortized portion of the nonrecoverable costs at the time of termination, adjusted for net salvage and possible reuse. Administrative costs associated with the specific case of special construction and any cost for restoring a location to its original condition are also included. A Termination Charge may never exceed the filed Maximum Termination Liability.

A partial termination of specially constructed facilities will be provided, at the election of the customer. The amount of the Termination Charge associated with such partial termination is determined by multiplying the termination charge which would result if all services using the specially constructed facilities were discontinued, at the time partial termination is elected, by the percentage of specially constructed facilities to be partially terminated. A tariff filing will be made following a partial termination to list remaining Maximum Termination Liability amounts and the number of specially constructed facilities the customer will remain liable for.

TARIFF BRANCH
RECEIVED
7/17/2006
PUBLIC SERVICE
COMMISSION
OF KENTUCKY

ISSUED: JULY 17, 2006
BY: Vice President
Lexington, Kentucky

EFFECTIVE: AUGUST 1, 2006

ACCESS SERVICE

15. Special Construction (Cont'd)

15.2 Regulations (Cont'd)

15.2.6 Liabilities and Charges for Special Construction (Cont'd)

15.2.6.4 Types of Liabilities and Charges (Cont'd)

(B) Maximum Termination Liability and Termination Charge (Cont'd)

Example:

A customer with a filed Maximum Termination Liability of $100,000 for 3600 specially constructed facilities requests a partial termination of 900 facilities. The Termination Charge for all facilities, at the time of election is $60,000. The partial termination charge, in this example, is $60,000 x 900/3600, or $15,000.

(C) Annual Underutilization Liability and Underutilization Charge

Prior to the start of special construction, the Company and the customer will agree on (1) the quantity of facilities to be provided, and (2) the length of the planning period during which the customer expects to place the facilities in service. The planning period is hereinafter referred to as the Initial Liability Period (ILP). The ILP is listed in the tariff with an effective and expiration date.

Underutilization occurs only if, at the expiration date of the ILP and annually thereafter, less than 70 percent of the specially constructed facilities are in service at filed tariff service rates.

An annual underutilization liability amount is filed on a per unit basis (e.g., per cable pair) for each case of special construction. This amount is equal to the annual per unit cost and includes depreciation, maintenance, administration, return, taxes and any other costs identified in the supporting documentation provided at the time the special construction case is filed.

Upon the expiration of the ILP, the number of underutilized facilities, if any, are multiplied by the annual underutilization amount. This product is then multiplied by the number of years (including any fraction thereof) in the ILP to determine the underutilization charge.

TARIFF BRANCH
RECEIVED
7/17/2006
PUBLIC SERVICE
COMMISSION
OF KENTUCKY

ISSUED: JULY 17, 2006
BY: Vice President
Lexington, Kentucky

EFFECTIVE: AUGUST 1, 2006

ACCESS SERVICE

15. Special Construction (Cont'd)

15.2 Regulations (Cont'd)

15.2.6 Liabilities and Charges for Special Construction (Cont'd)

15.2.6.4 Types of Liabilities and Charges (Cont'd)

(C) Annual Underutilization Liability and Underutilization Charge (Cont'd)

Annually thereafter, the number of underutilized facilities, if any, existing on the anniversary of the ILP expiration date will be multiplied by the annual underutilization charge for the preceding 12 month period.

Example

A customer orders 100 services and the special construction of a 600 pair building riser cable is agreed to, based on the customer's 5-year facility requirements. The ILP, in this example, would be filed at five years. The annual underutilization liability is filed at $2.00 per pair. If 400 pairs were in service at the end of the ILP, there would be an under-utilization of 20 pairs, i.e., 420 (70% of 600) - 400 = 20. The total underutilization charge for the first five years would be $200.00, or $2.00 per pair x 20 pairs x 5 years.

If 420 pairs are in service at the end of the 6th year, there is no underutilization, i.e., 420 - 420 = 0.

(D) Recurring Monthly Charges

(1) Charge for Route or Type Other than Normal

When special construction is requested using a route or type of facility other than that which the Company would normally use, a recurring monthly charge, in addition to the monthly rates for service, is applicable. The charge is equal to the difference between the recurring costs of the specially constructed facilities and the recurring costs of the facilities the Company would have normally used.

TARIFF BRANCH
RECEIVED
7/17/2006
PUBLIC SERVICE
COMMISSION
OF KENTUCKY

ISSUED: JULY 17, 2006
BY: Vice President
Lexington, Kentucky

EFFECTIVE: AUGUST 1, 2006

ACCESS SERVICE

15. Special Construction (Cont'd)

15.2 Regulations (Cont'd)

15.2.6 Liabilities and Charges for Special Construction (Cont'd)

15.2.6.4 Types of Liabilities and Charges (Cont'd)

(D) Recurring Monthly Charges (Cont'd)

(1) Charge for Route or Type Other than Normal (Cont'd)

(a) When an Optional Payment Charge as set forth in 2.6.4(A)(3) preceding has been elected, the recurring monthly charge will be reduced to include specially constructed facility operating expenses only.

(b) If the actual cost option as set forth in 2.6.3 preceding has been elected, the recurring charge will be adjusted to reflect the actual cost of the new construction when the costs have been determined. This adjusted recurring charge is applicable from the start of service.

(E) Lease Charge

This charge applies when the Company leases equipment in order to meet service requirements. The amount of the charge is equal to the net added cost to the Company caused by the lease.

(F) Cancellation Charge

If a service order with which special construction is associated is cancelled prior to the start of service, a cancellation charge will apply. The charge will include all nonrecoverable costs incurred by the Company in association with the special construction up to and including the time of cancellation.

TARIFF BRANCH
RECEIVED
7/17/2006
PUBLIC SERVICE
COMMISSION
OF KENTUCKY

ISSUED: JULY 17, 2006
BY: Vice President
Lexington, Kentucky

EFFECTIVE: AUGUST 1, 2006

ACCESS SERVICE

15. Special Construction (Cont'd)

15.2 Regulations (Cont'd)

15.2.7 Deferral of Start of Service

The Company may be requested to defer the start of service which will use specially constructed facilities subject to the provisions set forth in the service tariff under which service is being provided. Requests for special construction deferral must be made in writing and are subject to the following regulations.

15.2.7.1 Construction Has Not Begun

If the Company has not incurred any installation costs before receiving a request for deferral, no charge applies.

15.2.7.2 Construction Has Begun

If the construction of facilities has begun before the Company receives a request for deferral, charges will vary as follows:

(A) All Services are Deferred

When all services which will use specially constructed facilities are deferred, a charge based on the costs incurred by the Company during each month of the deferral will apply. Those costs include the recurring costs for that portion of the facilities already completed and any other costs associated with the deferral. The cost of any components of the nonrecurring charge which have been completed at the time of deferral will also apply.

(B) Some Services are Deferred

When some services which will use the specially constructed facilities are deferred, the construction case will be completed and all special construction charges will apply.

15.2.7.3 Construction Complete

If the construction of facilities has been completed before the Company receives a request for deferral, all special construction charges will apply.

TARIFF BRANCH
RECEIVED
7/17/2006
PUBLIC SERVICE
COMMISSION
OF KENTUCKY

ISSUED: JULY 17, 2006
BY: Vice President
Lexington, Kentucky

EFFECTIVE: AUGUST 1, 2006

ACCESS SERVICE

15. Special Construction (Cont'd)

15.2 Regulations (Cont'd)

15.2.8 Definitions

Actual Cost - The term "Actual Cost" denotes all costs charges against a specific case of special construction, including any appropriate taxes.

Annual Underutilization Liability - The term "Annual Underutilization Liability" denotes a per unit amount which may be billed annually if fewer services are in use utilizing specially constructed facilities at filed tariff rates than were originally specially constructed.

Estimated Cost - The term "Estimated Cost" denotes all estimated costs that will be incurred in providing a specific case of special construction, including any appropriate taxes.

Facilities - The term "Facilities" denotes any cable, poles, conduit, microwave or carrier equipment, wire center distribution frames, central office switching equipment, etc., utilized to provide interstate services.

Initial Liability Period - The term "Initial Liability Period" denotes the initial planning period during which the customer expects to place specially constructed facilities in service.

Installed Cost - The term "Installed Cost" denotes the total investment (estimated or actual) required by the Company to provide specially constructed facilities.

Maximum Termination Liability - The term "Maximum Termination Liability" denotes the maximum amount which may be billed if all services using specially constructed facilities are terminated prior to the expiration of the Maximum Termination Liability Period.

Maximum Termination Liability Period - The term "Maximum Termination Liability Period" denotes the length of time for which a termination charge may apply if all services using specially constructed facilities are terminated.

TARIFF BRANCH
RECEIVED
7/17/2006
PUBLIC SERVICE
COMMISSION
OF KENTUCKY

ISSUED: JULY 17, 2006
BY: Vice President
Lexington, Kentucky

EFFECTIVE: AUGUST 1, 2006

ACCESS SERVICE

15. Special Construction (Cont'd)

15.2 Regulations (Cont'd)

15.2.8 Definitions (Cont'd)

Net Salvage - The term "Net Salvage" denotes the estimated scrap, sale, or trade-in value, less the estimated cost of removal. Cost of removal includes the costs of demolishing, tearing down, or otherwise disposing of the material and any other applicable costs. Since the cost of removal may exceed salvage value, net salvage may be negative.

Nonrecoverable Cost - The term "Nonrecoverable Cost" denotes the cost of specially constructed facilities for which the Company has no foreseeable use should the service be terminated.

Normal Construction - The term "Normal Construction" denotes all facilities the Company would normally use to provide service in the absence of a requirement for special construction.

Normal Cost - The term "Normal Cost" denotes the estimated cost to provide services using normal construction.

Permanent Facilities - The term "Permanent Facilities" denotes facilities providing service for one month or more.

Recoverable Cost - The term "Recoverable Cost" denotes the cost of the specially constructed facilities for which the Company has a foreseeable reuse, either in place or elsewhere, should the service be terminated.

Termination Charge - The term "Termination Charge" denotes the portion of the Maximum Termination Liability that is applied as a nonrecurring charge when all services are discontinued prior to the expiration of the specified liability period.

TARIFF BRANCH
RECEIVED
7/17/2006
PUBLIC SERVICE
COMMISSION
OF KENTUCKY

ISSUED: JULY 17, 2006EFFECTIVE: AUGUST 1, 2006
BY: Vice President
Lexington, Kentucky

ACCESS SERVICE

16. ANCILLARY SERVICES

16.1 General

16.1.1 Service Offerings

Ancillary Services are available in the following categories:

(A) Billing and Collection Services

- Call Recording Service
- Message Processing Service
- Assembly and Editing Service
- Call Record Provision Service
- Message Bill Processing Service
- Bill Rendering Service
- Message Investigation Service
- General Billing Service
- Program Development
- Inquiry Service

Regulations, rates and charges as follows apply to Ancillary Services and shall not serve as a substitute for customer tariff offerings of services to end users. The provision of such Ancillary Services by the Telephone Company, as set forth following, does not constitute a joint undertaking with the customer for the furnishing of any service.

The Telephone Company's undertaking to provide Ancillary Services is made only in conjunction with intrastate services offered within its operating territory.

The regulations, rates and charges contained herein are in addition to the applicable regulations, rates and charges specified in other sections of this Tariff and in other tariffs of the Telephone Company which are referenced herein.

16.1.2 Regulations

(A) Undertaking of the Telephone Company

(1) Provision of Ancillary Services

(a) The Telephone Company, to the extent Ancillary Service are, or can be made available with reasonable effort, will provide to the customer Ancillary Services as described in 16.1.3, at rates and charges as specified in 16.1.5.

TARIFF BRANCH
RECEIVED
7/17/2006
PUBLIC SERVICE
COMMISSION
OF KENTUCKY

ISSUED: JULY 17, 2006
BY: Vice President
Lexington, Kentucky

EFFECTIVE: AUGUST 1, 2006

ACCESS SERVICE

16. ANCILLARY SERVICES (Cont'd)

16.1 General (Cont'd)

16.1.2 Regulations (Cont'd)

(A) Undertaking of the Telephone Company (Cont'd)

(1) Provision of Ancillary Services (Cont'd)

(b) When the customer subscribes to Call Recording Service, as set forth in 16.1.3(A)(1), and customer message detail is not available because the Telephone Company lost or damaged tapes or incurred recording system outages, the Telephone Company will estimate the volume of lost customer messages and associated revenue based on previously known values determined from historical data. In such events the extent of the Telephone Company's liability for damages shall be limited to the granting of a corresponding credit adjustment on the customer's bill representing amounts due to the customer for the unbilled revenue.

When the Telephone Company is notified that, due to error or omission, incomplete data has been provided to a customer, the Telephone Company will make every reasonable effort to locate and/or recover the data and provide new magnetic tapes to the customer at no additional charge. Such request to recover the data must be made within 30 days from the date the details were initially made available to the customer. If the data cannot be recovered, the extent of the Telephone Company's liability for damages shall be limited as set forth in the preceding paragraph.

(c) The Telephone Company shall be responsible for contacts and arrangements with the end user concerning the billing, collecting, crediting and adjusting of the customer's service charges, when the Telephone Company provides Inquiry Service as set forth in 16.1.3(A)(11).

(d) Message Bill Processing, Bill Rendering, General Billing Service and Inquiry Services will only be offered by the Telephone Company with the purchase of receivables. The Telephone Company will purchase the customer's receivables at a discount from face value. The exact contents of the discount factor and specific settlement procedures will be contained in individual contractual arrangements signed by each customer.

TARIFF BRANCH
RECEIVED
7/17/2006
PUBLIC SERVICE
COMMISSION
OF KENTUCKY

ISSUED: JULY 17, 2006
BY: Vice President
Lexington, Kentucky

EFFECTIVE: AUGUST 1, 2006

ACCESS SERVICE

16. ANCILLARY SERVICES (Cont'd)

16.1 General (Cont'd)

16.1.2 Regulations (Cont'd)

(A) Undertaking of the Telephone Company (Cont'd)

(2) Discontinuance and Refusal of Ancillary Services

(a) If the customer fails to comply with the provisions of this Tariff, including any payments to be made by it on the dates or at the times herein specified, and fails within thirty (30) days after written notice via certified mail from the Telephone Company to an officer of the customer requesting payment for such noncompliance, the Telephone Company may discontinue the provision of the Ancillary Service. In case of such discontinuance, all applicable charges shall immediately become due.

(b) If the customer repeatedly fails to comply with the provisions of this Tariff in connection with the provision of Ancillary Services and fails to correct such course of action after notice as set forth in (a) preceding, the Telephone Company may refuse applications for additional Ancillary Services.

(B) Obligations of the Customer

(1) References to the Telephone Company

The customer may advise end users that Ancillary Services are provided by the Telephone Company in connection with the service the customer furnishes to its end users.

(2) Request for Service

(a) Minimum Order Periods

The customer shall order Ancillary Service(s) with the following minimum requirements:

The minimum period for which Call Recording Service is provided and for which charges apply is one month (30 days). A customer may cancel Call Recording Service on any date prior to the start of the next month's service. If written notice is not received from the customer, or from the telephone company that ordered the Call Recording Service prior to the start of the following month's service, the Telephone Company shall assume that the service is to be extended for another month (30 days).

TARIFF BRANCH
RECEIVED
7/17/2006
PUBLIC SERVICE
COMMISSION
OF KENTUCKY

ISSUED: JULY 17, 2006
BY: Vice President
Lexington, Kentucky

EFFECTIVE: AUGUST 1, 2006

ACCESS SERVICE

16. ANCILLARY SERVICES (Cont'd)

16.1 General (Cont'd)

16.1.2 Regulations (Cont'd)

(B) Obligations of the Customer (Cont'd)

(2) Request for Service (Cont'd)

(a) Minimum Order Periods (Cont'd)

The initial minimum period for Message Processing, Message Bill Processing, Bill Rendering, General Billing and Inquiry Services is three years. Six months prior to the end of the initial order period or subsequent extension, the customer shall notify the Telephone Company in writing, if the service is to be discontinued. If no notice is received from the customer, the Telephone Company shall assume that the service is extended for another year.

(b) Order Requirements

When Call Recording Service is ordered, the customer shall furnish the Telephone Company an estimate of the number of messages (message capacity) to be recorded. When Call Recording Service is provided from an end office switch, the estimate of the number of messages to be recorded shall be provided by end office. When Call Recording Service is provided from an access tandem, the estimate of the number of messages to be recorded shall be provided by access tandem. The message capacity shall be provided by year.

When Message Processing Service is ordered, the customer shall furnish the Telephone Company an estimate of the number of messages (message capacity) to be processed. The number of messages shall be provided by year.

When Message Bill Processing, Message Investigation, General Billing and Inquiry Services are ordered for MTS/WATS services, the customer shall furnish the Telephone Company an estimate of the number of messages (message capacity) to be billed. The message capacity shall be provided by year. Separate estimates shall be furnished by the customer for MTS messages, bulk-billed messages (WATS/800 services) and invoice billing messages.

TARIFF BRANCH
RECEIVED
7/17/2006
PUBLIC SERVICE
COMMISSION
OF KENTUCKY

ISSUED: JULY 17, 2006
BY: Vice President
Lexington, Kentucky

EFFECTIVE: AUGUST 1, 2006

ACCESS SERVICE

16. ANCILLARY SERVICES (Cont'd)

16.1 General (Cont'd)

16.1.2 Regulations (Cont'd)

(B) Obligations of the Customer (Cont'd)

(2) Request for Service (Cont'd)

(b) Order Requirements (Cont'd)

When Bill Rendering Service is ordered, the customer shall furnish the Telephone Company an estimate of the number of bills for which Bill Rendering Service will be provided. The bill capacity shall be provided by year. Separate estimates shall be furnished by the customer for MTS bills, bulk-billed (WATS/800) bills and invoice billing bills.

(C) Payment Arrangements

(1) Minimum Charges

(a) Call Recording, Message Processing, Message Bill Processing, General Billing and Inquiry Services are subject to minimum charges.

(b) Any minimum billings associated with the above services, will be filed on an individual case basis in Section 16.1.5(B) of this Tariff.

(2) Cancellation of Order for Ancillary Services

(a) When an order for Ancillary Services is canceled prior to the start of installation of such Ancillary Services, no charges will apply. Installation of Ancillary Services is considered to have started when the Telephone Company incurs any cost in connection therewith or in preparation thereof which would not otherwise have been incurred.

(b) Where program development of Ancillary Services has been started prior to the cancellation, and to the extent the Telephone Company has another use for the specially developed Ancillary Services, no charge applies. When the Telephone Company has no other use for the specially developed Ancillary Services, a charge equal to the costs incurred prior to the date of cancellation applies. Such charge is determined as detailed in paragraph (c).

TARIFF BRANCH
RECEIVED
7/17/2006
PUBLIC SERVICE
COMMISSION
OF KENTUCKY

ISSUED: JULY 17, 2006
BY: Vice President
Lexington, Kentucky

EFFECTIVE: AUGUST 1, 2006

ACCESS SERVICE

16. ANCILLARY SERVICES (Cont'd)

16.1 General (Cont'd)

16.1.2 Regulations (Cont'd)

(C) Payment Arrangements (Cont'd)

(2) Cancellation of Order for Ancillary Services (Cont'd)

(c) The charge, as specified in paragraph (b), includes the cost, less the net salvage value of equipment and material either ordered, provided or installed, plus the nonrecoverable cost of system development and installation. Charges will be determined on an individual case basis as required and will be specified in 16.1.5(C).

(3) Acceptance of Gift Certificates

The Telephone Company will accept customer gift certificates for payment from end users, if the customer agreed in writing to redeem all such gift certificates.

(4) Minimum Period Disconnect Charges

Minimum period disconnect charges will apply, if service is discontinued prior to the expiration of the minimum period. For Call Recording Service, the Telephone Company will use the most recent 30 day period for which data is available to determine the total minimum monthly charge. The customer will only be billed for the adjusted amount due, if payment has been received for any portion of the discontinued service.

If, for Message Processing, Message Bill Processing, Bill Rendering, General Billing and Inquiry Services, service is discontinued prior to the end of the period ordered, the customer will pay the minimum charges for the remaining months of the minimum order period specified in 16.1.2(B)(2)(a).

The monthly charge for Message Processing, Message Bill Processing, Bill Rendering, General Billing and Inquiry Services, will be one-twelfth of the appropriate yearly message capacity (i.e., MTS service billed or bulk-billed capacity estimate) furnished by the customer as set forth above, times the appropriate Message Processing, Message Bill Processing, Bill Rendering, General Billing and Inquiry Services rate.

TARIFF BRANCH
RECEIVED
7/17/2006
PUBLIC SERVICE
COMMISSION
OF KENTUCKY

ISSUED: JULY 17, 2006
BY: Vice President
Lexington, Kentucky

EFFECTIVE: AUGUST 1, 2006

ACCESS SERVICE

16. ANCILLARY SERVICES (Cont'd)

16.1 General (Cont'd)

16.1.2 Regulations (Cont'd)

(C) Payment Arrangements (Cont'd)

(5) Payment of Charges

When the Telephone Company purchases Call Recording from another telephone company and/or Message Processing Services from another telephone company or entity for a customer, the rates and charges for such services contained in this Tariff are applicable.

(6) Customer's End User Deposits

When Bill Rendering, General Billing Services are ordered, the Telephone Company will determine and collect a deposit from the customer's end user in accordance with the Telephone Company deposit regulations. The Telephone Company will provide the customer with a copy of its deposit regulations upon request.

16.1.3 Description of Ancillary Services

Ancillary Services shall be furnished to subscribers to the Telephone Company's access services, and in addition other telecommunications service providers, including providers of telephone answering services or voice messaging services.

All subscribers of Ancillary Services are subject to the terms and conditions contained within this tariff. Should the customer choose to perform his/her own ancillary functions and require sufficient information to do so, listed customer information may be purchased consistent with state regulations governing any rights to privacy. Charges for such lists will be calculated on a individual case basis.

(A) Billing and Collection Services

(1) Call Recording Service

The Telephone Company will provide Call Recording in Telephone Company suitably equipped end offices or tandems. Call recording is available only with FGC, FGD or similar Feature Group offerings, when used in the provision of MTS/WATS services. Call Recording is the entering on magnetic tape or other acceptable media the details of customer messages originated through Switched Access Service or Switched Access-like service for which answer and disconnect supervision has been received. The Telephone Company will provide the customer, upon request, the recorded message detail, as agreed to by both parties, for each completed intrastate message generated by end users gaining access to the customer from the Access Area.

TARIFF BRANCH
RECEIVED
7/17/2006
PUBLIC SERVICE
COMMISSION
OF KENTUCKY

ISSUED: JULY 17, 2006
BY: Vice President
Lexington, Kentucky

EFFECTIVE: AUGUST 1, 2006

ACCESS SERVICE

16. ANCILLARY SERVICES (Cont'd)

16.1 General (Cont'd)

16.1.3 Description of Ancillary Services (Cont'd)

(A) Billing and Collection Services (Cont'd)

(1) Call Recording Service (Cont'd)

The equipment at the customer designated location shall provide such signals as may be required for the proper operation of the Telephone Company's automatic call recording equipment used to perform this function.

The Telephone Company may purchase Call Recording Service from another telephone company. Another telephone company or entity may purchase Call Recording Service from the Telephone Company.

A standard format for the provision of the recorded message detail will be established by the Telephone Company. The Telephone Company will provide to the customer the precise details of the format. If, in the course of Telephone Company business, it is necessary to change the format, the Telephone Company will provide notification to the customer six months in advance of the change.

(2) Message Processing Service

Message Processing Service consists of the transformation of recorded customer message details into rated messages. Message Processing Service will be provided for each intrastate message generated by end users gaining access to the customer from the Access Area of the Telephone Company. Message Processing Service includes the following:

(a) Assembly of Message Detail

This function consists of arranging the customer's recorded message details into a format required for subsequent processing.

(b) Editing of Message Detail

This function consists of examining individual message detail and identifying the messages with errors or the messages which require further examination.

TARIFF BRANCH
RECEIVED
7/17/2006
PUBLIC SERVICE
COMMISSION
OF KENTUCKY

ISSUED: JULY 17, 2006
BY: Vice President
Lexington, Kentucky

EFFECTIVE: AUGUST 1, 2006

ACCESS SERVICE

16. ANCILLARY SERVICES (Cont'd)

16.1 General (Cont'd)

16.1.3 Description of Ancillary Services (Cont'd)

(A) Billing and Collection Services (Cont'd)

(2) Message Processing Service (Cont'd)

(c) Rating of Messages

This function consists of calculating the charges for messages based on the customer's schedule of charges and the message detail.

The Telephone Company will provide Message Processing Service only for customer messages originated within the Access Area.

For the purpose of performing Message Processing Service, the Telephone Company may purchase Message Processing Service from another telephone company or entity as set forth in 16.1.2(C)(5). Another telephone company or entity may purchase Message Processing Service from the Telephone Company.

Where the customer provides its own message details, it must be in the standard format established by the Telephone Company. The Telephone Company will provide to the customer the precise details of the required format. If, in the course of Telephone Company business, it is necessary to change the format, the Telephone Company will provide notification to the customer six months in advance of the change.

Where the Telephone Company has rated customer messages which are to be billed to an end user by another telephone company or entity, the Telephone Company will enter the customer messages on a magnetic tape or data file and transmit the rated messages as set forth in 16.1.3(A)(4).

(3) Assembly and Editing Service

Assembly is the aggregation of recorded message details to create individual messages for rating. Editing is the process of verifying that the assembled message data is in accordance with the Telephone Company standard format and prescribed Exchange Message Interface (EMI) specifications.

TARIFF BRANCH
RECEIVED
7/17/2006
PUBLIC SERVICE
COMMISSION
OF KENTUCKY

ISSUED: JULY 17, 2006
BY: Vice President
Lexington, Kentucky

EFFECTIVE: AUGUST 1, 2006

ACCESS SERVICE

16. ANCILLARY SERVICES (Cont'd)

16.1 General (Cont'd)

16.1.3 Description of Ancillary Services (Cont'd)

(A) Billing and Collection Services (Cont'd)

(3) The editing function consists of examining individual message detail and identifying the messages with errors or the messages requiring further examination. The editing process includes the validation of data categories such as; but not limited to, the following:

- Called Telephone Number
- Calling Telephone Number
- Date

The assembled and edited recorded message detail will be provided to the customer as set forth in 16.1.3(A)(4).

(4) Call Record Provision Service

Call Record Provision Service is the transmission and receipt of rated and unrated message data. It also includes the transmission of end user data as a result of customer generated activity (i.e., transmitting end user data during conversion activities, etc.)

The billing information and/or end user data may be transmitted or received on magnetic tape or other acceptable media via either of two principal methods:

- Hand carried recording media (i.e., magnetic tape).
- Direct interface (data link) to the Telephone Company billing center.

The Telephone Company will determine the number of magnetic tapes required to transmit message/ record data to the customer, another telephone company or billing entity.

(5) Message Bill Processing Service

Message Bill Processing Service is the accumulation, guiding and preparation of messages (including the application of taxes), for end user bill rendering for MTS/WATS services.

TARIFF BRANCH
RECEIVED
7/17/2006
PUBLIC SERVICE
COMMISSION
OF KENTUCKY

ISSUED: JULY 17, 2006
BY: Vice President
Lexington, Kentucky

EFFECTIVE: AUGUST 1, 2006

ACCESS SERVICE

16. ANCILLARY SERVICES (Cont'd)

16.1 General (Cont'd)

16.1.3 Description of Ancillary Services (Cont'd)

(A) Billing and Collection Services (Cont'd)

(5) Message Bill Processing Service (Cont'd)

Message-Billed Message Bill Processing Service is the accumulation, guiding, posting and formatting of rated message detail for bill rendering. The Telephone Company will process Calling Plans (i.e., Directory Assistance, Optional Calling Plans, Dial-It calls, etc.) that require the application of a discount to aggregate MTS usage as a part of its Message-Billed Message Bill Processing Service.

The rating may have been done by another entity, or the customer. Where a customer subscribes to Message Processing Service as set forth in 16.1.3(A)(2), the rated customer messages will be used as the input. If the customer provides the rated messages, the end user account to be billed shall be identified and the records shall be provided in the standard format established by the Telephone Company and delivered, as set forth in 16.1.3(A) (4) or 16.1.4(A)(13), to the location specified by the Telephone Company.

If the customer provided rated messages must be converted by the Telephone Company to the standard format, and the Telephone Company agrees to make the conversion, program development charges as set forth in 16.1.5(A) apply for the hours required to design, develop, test and maintain the necessary programs. If, in the course of Telephone Company business, it is necessary to change the format, the Telephone Company will provide notification to the customer six months in advance of the change.

The Telephone Company will only provide Message Bill Processing Service when Bill Rendering Service and Record Keeping are ordered.

The Message Bill Processing Service rate band will be determined by the Telephone Company for each customer based on the total number of interstate and intrastate messages per year.

TARIFF BRANCH
RECEIVED
7/17/2006
PUBLIC SERVICE
COMMISSION
OF KENTUCKY

ISSUED: JULY 17, 2006
BY: Vice President
Lexington, Kentucky

EFFECTIVE: AUGUST 1, 2006

ACCESS SERVICE

16. ANCILLARY SERVICES (Cont'd)

16.1 General (Cont'd)

16.1.3 Description of Ancillary Services (Cont'd)

(A) Billing and Collection Services (Cont'd)

(5) Message Bill Processing Service (Cont'd)

The rate for Message Bill Processing Service shall be the rate corresponding to the Message Bill Processing Service rate for such volume of messages as set forth in 16.1.5(A) on a calendar year basis. As used in this Tariff, the term calendar year shall mean the period from January 1 through December 31 (both dates inclusive) of a given year.

The Telephone Company will use the customer provided message capacity to determine the band and its associated rate, during the year of the initial minimum period. During the first quarter of the next year, the customer and the Telephone Company will determine the actual volume of messages for which the Telephone Company performed Message Bill Processing Service. Such actual volumes shall be compared to the Message Bill Processing Service bands as set forth in 16.1.5(A) to determine which band such actual volume of messages fall. If the actual volume is greater than or less than customer provided message capacity, the actual volume will be multiplied by the appropriate band rate and compared to the billed volume to determine either a charge or credit. This charge or credit will be applied to the customer's subsequent bill.

For each year thereafter, the Telephone Company and the customer shall utilize the previous years actual volumes of messages and the customer provided message capacity in an effort to determine the appropriate band for the next calendar year. In the first quarter of each year, the procedure described in the previous paragraph will be followed.

(6) Bill Rendering Service

Bill Rendering Service is the printing and mailing of statements showing amounts due from end users for services provided by the customer. Bill Rendering Service includes payment and remittance processing, treatment, denial of service and collection of deposits (where appropriate) and other monies due from the end user. Bill Rendering Service is provided on a per bill basis.

TARIFF BRANCH
RECEIVED
7/17/2006
PUBLIC SERVICE
COMMISSION
OF KENTUCKY

ISSUED: JULY 17, 2006
BY: Vice President
Lexington, Kentucky

EFFECTIVE: AUGUST 1, 2006

ACCESS SERVICE

16. ANCILLARY SERVICES (Cont'd)

16.1 General (Cont'd)

16.1.3 Description of Ancillary Services (Cont'd)

(A) Billing and Collection Services (Cont'd)

(6) Bill Rendering Service (Cont'd)

When the Telephone Company provides Bill Rendering Service, the customer's statement of the amount due may, at Telephone Company option, be included as part of the regular monthly bill for local exchange service mailed to the end user.

The Telephone Company may, in accordance with its deposit regulations, determine and collect a deposit from the end user for the customer's services as set forth in 16.1.2(C) (6). When necessary, the Telephone Company, in accordance with its treatment procedures, shall deny the customer's services and/or local exchange services to an end user. Where local exchange service access is denied, access to the customer services will also be denied.

Bill Rendering Service will only be provided in conjunction with the purchase of a customer's receivables. The Telephone Company will not be responsible for any customer's balance due from end users prior to the initial order period.

The Telephone Company will only provide Bill Rendering Service when Message Bill Processing Service with Record Keeping is ordered.

The Bill Rendering Service rate band will be determined by the Telephone Company for each customer based on the total number of bills per year.

(7) Message Investigation Service

The Telephone Company will provide Message Investigation Service when requested by the customer. Message Investigation Service is that activity undertaken by the Telephone Company to secure, or attempt to secure proper billing information in an effort to sustain or recharge the customer's message. The Telephone Company will investigate, at the request of the customer, unbillable messages to correct message detail information to allow for the proper billing application.

TARIFF BRANCH
RECEIVED
7/17/2006
PUBLIC SERVICE
COMMISSION
OF KENTUCKY

ISSUED: JULY 17, 2006
BY: Vice President
Lexington, Kentucky

EFFECTIVE: AUGUST 1, 2006

ACCESS SERVICE

16. ANCILLARY SERVICES (Cont'd)

16.1 General (Cont'd)

16.1.3 Description of Ancillary Services (Cont'd)

(A) Billing and Collection Services (Cont'd)

(7) Message Investigation Service (Cont'd)

The customer's request for Message Investigation Service shall identify the customer message, the date the customer message was billed and the amount of the customer message. Message Investigation Service is provided on a per message investigated basis.

Message Investigation Service will be provided for each intrastate message generated by end users gaining access to the customer MTS/WATS services from the Access Area of the Telephone Company.

(8) General Billing Service

General Billing Service includes the preparation of bills, mailing of the bills to the end users and the collection of deposits and monies due from the end users. General Billing Service also includes master file maintenance.

When General Billing Service is ordered, the Telephone Company will accumulate, guide and post rated messages in preparation for billing (includes the application of taxes). The Telephone Company will also print and mail statements showing amounts due from end users for MTS services provided by the customer.

Collection Service provided to the customer will include receiving payments from the customer's end users, treatment of receivables, treatment of accounts, master file maintenance and collection of deposits (where appropriate) as set forth in 16.1.2(C)(6). When necessary, the Telephone Company, in accordance with its treatment procedures, shall deny the customer's services and/or local exchange services to an end user. Where local exchange service access is denied, access to the customer services will also be denied.

TARIFF BRANCH
RECEIVED
7/17/2006
PUBLIC SERVICE
COMMISSION
OF KENTUCKY

ISSUED: JULY 17, 2006
BY: Vice President
Lexington, Kentucky

EFFECTIVE: AUGUST 1, 2006

ACCESS SERVICE

16. ANCILLARY SERVICES (Cont'd)

16.1 General (Cont'd)

16.1.3 Description of Ancillary Services (Cont'd)

(A) Billing and Collection Services (Cont'd)

(8) General Billing Service (Cont'd)

The rating may have been done by another entity or the customer. Where the customer subscribes to Message Processing Service as set forth in 16.1.3(A)(2), the rated customer messages will be used as the input. If the customer or another entity provides the rated messages, the end user account to be billed shall be identified and the records shall be provided in the standard format established by the Telephone Company and delivered as set forth in 16.1.3(A)(4) or 16.1.4(A)(13).

General Billing Service will only be provided in conjunction with the purchase of a customer's receivables. The Telephone Company will not be responsible for any customer's balance due from end users prior to the initial order period.

(9) Reserved for Future Use

TARIFF BRANCH
RECEIVED
7/17/2006
PUBLIC SERVICE
COMMISSION
OF KENTUCKY

ISSUED: JULY 17, 2006
BY: Vice President
Lexington, Kentucky

EFFECTIVE: AUGUST 1, 2006

ACCESS SERVICE

16. ANCILLARY SERVICES (Cont'd)

16.1 General (Cont'd)

16.1.3 Description of Ancillary Services (Cont'd)

(A) Billing and Collection Services (Cont'd)

(10) Program Development Service

Program Development Service consists of developing the customer's schedule of rates into a rating program and changing the bill format when requested by the customer.

Program Development Service also includes converting message data, transmitted to the Telephone Company by the customer or another entity, into the Telephone Company standard format for processing.

A Program Development Charge, as set forth in 16.1.5(A), applies for the programming hours required for software designing and coding.

A Program Implementation Charge, as set forth in 16.1.5(A), applies for table updating, testing, administration, documenting program changes and other implementation activities.

Changes in the rate levels of customer charges to be billed will normally be implemented within 30 days after receipt of an order from the customer requesting such change. When modification to the rating program is required, a Program Development Charge will also apply. Changes in rate structure will normally be completed within six months of a customer's order.

TARIFF BRANCH
RECEIVED
7/17/2006
PUBLIC SERVICE
COMMISSION
OF KENTUCKY

ISSUED: JULY 17, 2006
BY: Vice President
Lexington, Kentucky

EFFECTIVE: AUGUST 1, 2006

ACCESS SERVICE

16. ANCILLARY SERVICES (Cont'd)

16.1 General (Cont'd)

16.1.3 Description of Ancillary Services (Cont'd)

(A) Billing and Collection Services (Cont'd)

(10) Program Development Service (Cont'd)

The complexity of the structural change will determine the exact length of time necessary to fulfill the request. Rate structure changes will be made only when the Telephone Company can accommodate such changes.

(11) Inquiry Service

Inquiry Service consists of answering end user questions about charges billed for the customer's services, applying credits and adjustments to end user accounts, and reviewing messages removed from end user bills.

When the Telephone Company provides Inquiry Service, the Telephone Company will be responsible for contacts and arrangements (either written or oral) with the customer's end users concerning the billing, collecting, crediting, adjusting and message investigation of the customer's service charges in accordance with written instructions furnished by the customer and agreed to by the Telephone Company. Billed messages removed from an end user's bill will be appropriately adjusted to the customer's account receivable as agreed to by both parties.

The Telephone Company will not become involved in disputes between a customer and its end users. Consequently, utilizing Telephone Company guidelines previously established for the collection process for its own accounts, the Telephone Company may remove a disputed customer's charge from an end user's bill and deduct that amount from the customer's accounts receivable. It will be the customer's responsibility to pursue the collection of the disputed amount.

The Telephone Company shall have the final authority to make adjustments or deny service for disputed charges on end users accounts.

Inquiry Service will only be provided in conjunction with the purchase of a customer's receivables. The Telephone Company will not be responsible for any customer's balances due from end users prior to the initial order period.

TARIFF BRANCH
RECEIVED
7/17/2006
PUBLIC SERVICE
COMMISSION
OF KENTUCKY

ISSUED: JULY 17, 2006
BY: Vice President
Lexington, Kentucky

EFFECTIVE: AUGUST 1, 2006

ACCESS SERVICE

16. ANCILLARY SERVICES (Cont'd)

16.1 General (Cont'd)

16.1.3 Description of Ancillary Services (Cont'd)

(A) Billing and Collection Services (Cont'd)

(11) Inquiry Service (Cont'd)

Inquiry Service will only be provided when Message Bill Processing or General Billing Service is ordered. Inquiry Service will only be provided in the Telephone Company operating territory.

Inquiry Service consists of a bifurcated rate structure, a per message billed rate and a per adjustment rate.

16.1.4 Rate Regulations

(A) Billing and Collection Services

(1) Call Recording Service for MTS/WATS services includes the functions listed in 16.1.3(A)(1). The rate, as set forth in 16.1.5(A), applies per message recorded.

(2) Message Processing Service for MTS/WATS services includes the functions listed in 16.1.3(A)(2). The rate, as specified in 16.1.5(A), applies per message processed. In those locations where WATS services are metered, or the billing record is summarized by another telephone company, the Message Processing rate, as set forth in 16.1.5(A), will apply per billing record processed. For rating purposes, a billing record is defined as any record which is required to be processed to accomplish billing of a customer's WATS usage.

(3) Assembly and Editing Service for MTS/WATS services consists of the functions listed in 16.1.3(A)(3). The rates, as specified in 16.1.5(A), applies per message assembled and edited.

(4) When message detail is transmitted to or received from the customer, another telephone company or billing entity, a Call Record Provision charge will apply. For this purpose, a record is a logical grouping of information as described in the program that processes the information and loads the magnetic tape or data file. The rate, as specified in 16.1.5(A), applies per record transmitted or received. The Telephone Company will determine the Call Record Provision charge based on its count of the records transmitted or received.

TARIFF BRANCH
RECEIVED
7/17/2006
PUBLIC SERVICE
COMMISSION
OF KENTUCKY

ISSUED: JULY 17, 2006
BY: Vice President
Lexington, Kentucky

EFFECTIVE: AUGUST 1, 2006

ACCESS SERVICE

16. ANCILLARY SERVICES (Cont'd)

16.1 General (Cont'd)

16.1.4 Rate Regulations (Cont'd)

(A) Billing and Collection Services (Cont'd)

(5) The Message Bill Processing Service charge applies whenever the Telephone Company performs the functions listed in 16.1.3(A)(5).

The rate for Message Bill Processing Service shall be the rate corresponding to the Message Bill Processing Service rate for such volume of messages as set forth in 16.1.5(A) on a calendar year basis. As used in this Tariff, the term calendar year shall mean the period from January 1 through December 31 (both dates inclusive) of a given year. The Message Bill Processing Service rate band will be determined by the Telephone Company for each customer based on the total number of interstate and intrastate messages per year.

The Telephone Company will use the customer provided message capacity to determine the band and its associated rate the first year of the initial minimum period. During the first quarter of the next year, the customer and the Telephone Company will determine the actual volume of messages for which the Telephone Company performed Message Bill Processing Service. Such actual volumes shall be compared to the Message Bill Processing Service bands as set forth in 16.1.5(A) to determine which band such actual volume of messages fall. If the actual volume is greater than or less than customer provided message capacity, the actual volume will be multiplied by the appropriate band rate and compared to the billed volume to determine either a charge or credit. This charge or credit will be applied to the customer's subsequent bill.

For each year thereafter, the Telephone Company and the customer shall utilize the previous year's actual volume of messages and the customer provided message capacity in an effort to determine the appropriate band for the next calendar year. In the first quarter of each year, the procedure described in the previous paragraph will be followed.

The rate, as specified in 16.1.5(A) applies per message processed. The bulk-billed Message Bill Processing Service charge applies per WATS/800 message processed.

TARIFF BRANCH
RECEIVED
7/17/2006
PUBLIC SERVICE
COMMISSION
OF KENTUCKY

ISSUED: JULY 17, 2006
BY: Vice President
Lexington, Kentucky

EFFECTIVE: AUGUST 1, 2006

ACCESS SERVICE

16. ANCILLARY SERVICES (Cont'd)

16.1 General (Cont'd)

16.1.4 Rate Regulations (Cont'd)

(A) Billing and Collection Services (Cont'd)

(6) Bill Rendering Service includes the functions listed in 16.1.3(A)(6). The rate for Bill Rendering shall be the rate corresponding to the Bill Rendering Service rate for such volume of bills for a particular Telephone Company Billing service as set forth in 16.1.5(A) on a calendar year basis. As used in this Tariff, the term calendar year shall mean the period from January 1 through December 31 (both dates inclusive) of a given year. The Bill Rendering Service rate band is determined by the Telephone Company for each customer based on the total number of bills per year.

The Telephone Company will use the customer provided bill capacity to determine the band and its associated rate the first year of the initial minimum period. During the first quarter of the next year, the customer and the Telephone Company will determine the actual volume of bills for which the Telephone Company performed Bill Rendering Service. Such actual volumes shall be compared to the Bill Rendering Service bands as set forth in 16.1.5(A) to determine which band such actual volume of bills fall. If the actual volume is greater than or less than the customer provided bill capacity, the actual volume will be multiplied by the appropriate band rate and compared to the billed volume to determine either a charge or credit. This charge or credit will be applied to the customer's subsequent bill.

For each year thereafter, the Telephone Company and the customer shall utilize the previous year's actual volume of bills and the customer provided bill capacity in an effort to determine the appropriate band for the next calendar year. In the first quarter of each year, the procedures described in the previous paragraph will be followed.

The rate, as specified in 16.1.5(A) applies per bill rendered. A factor, based on actual interstate and intrastate billed-messages, will be used by the Telephone Company to apportion the Bill Rendering charge by jurisdiction.

(7) Message Investigation Service consists of the functions listed in 16.1.3(A)(7). The rate, as specified in 16.1.5(A), applies per message investigated by the Telephone Company.

TARIFF BRANCH
RECEIVED
7/17/2006
PUBLIC SERVICE
COMMISSION
OF KENTUCKY

ISSUED: JULY 17, 2006
BY: Vice President
Lexington, Kentucky

EFFECTIVE: AUGUST 1, 2006

ACCESS SERVICE

16. ANCILLARY SERVICES (Cont'd)

16.1 General (Cont'd)

16.1.4 Rate Regulations (Cont'd)

(A) Billing and Collection Services (Cont'd)

(8) General Billing Service consists of the functions listed in 16.1.3(A)(8). The rate, as set forth in 16.1.5(A), applies per message.

(9) Reserved for Future Use

(10) A Record Keeping Charge applies for each end user account maintained by the Telephone Company for the customer. An end user account is a record which has a name and address and a unique billing identification number assigned by the Telephone Company to which a bill is rendered. The Record Keeping Charge, as specified in 16.1.5(A), applies per month for each account and/or line maintained. A factor, based on actual interstate and intrastate billed messages, will be used to apportion the Record Keeping charge by jurisdiction.

(11) An Exchange Carrier Memorandum (EC Memo) charge will be assessed each time the customer requests a manual adjustment to an end user account. The EC Memo charge, as specified in 16.1.5(A), applies per account adjusted per memo. When necessary, a factor (based on actual interstate and intrastate adjusted messages) will be used to apportion the EC Memo charge by jurisdiction.

(12) A Service Order Change Charge applies whenever a billing service order is accepted by the Telephone Company to update (i.e., add, change or delete) its billing file to implement the requested activity. The Service Order Change Charge, as set forth in 16.1.5(A), applies per order processed.

(13) A Centralized Message Dispersion charge will apply when the Telephone Company provides a single point for the receipt of customer message data. The Telephone Company will receive, edit, sort, disperse and confirm the number of accepted billable messages and the total amount due the customer for services provided to its end users. In addition, the rated and/or unrated message data is dispersed to the appropriate location for further processing and/or billing. The rates, as set forth in 16.1.5(A) will apply per message processed. Call Record Provision charges, as set forth in 16.1.5(A) will apply for the receipt of each billable message and the transmission of each unbillable message.

TARIFF BRANCH
RECEIVED
7/17/2006
PUBLIC SERVICE
COMMISSION
OF KENTUCKY

ISSUED: JULY 17, 2006
BY: Vice President
Lexington, Kentucky

EFFECTIVE: AUGUST 1, 2006

ACCESS SERVICE

16. ANCILLARY SERVICES (Cont'd)

16.1 General (Cont'd)

16.1.4 Rate Regulations (Cont'd)

(A) Billing and Collection Services (Cont'd)

(14) Inquiry Service includes the functions listed in 16.1.3(A) (11). Inquiry Service consists of a bifurcated rate structure, a per message billed and a per adjustment rate. The Inquiry Service per message billed rate applies for each customer message billed by the Telephone Company. The per message adjustment rate applies for each occurrence of an adjustment made to an end user bill (account).

A PIU factor will be used by the Telephone Company to apportion the message adjustment rate by jurisdiction.

16.1.5 Rates and Charges

(A) Billing and Collection Services

(1)	Program Development Charge: per Hour	$ 94.00
(2)	Program Implementation: per Hour	55.00
(3)	Service Order Change Charge: per Order	4.00
(4)	MTS/WATS/800 Services Call Recording Service: per Message	.0150
(5)	MTS/WATS/800 Services Message Processing Service: per Message	.0100
	Assembly and Editing Service: per Message	.0075
(6)	Call Record Provision Service Via Magnetic Tape, Per Message Record Transmitted or Received	.01
	Via Direct Interface, Per Message Record Transmitted or Received	.002

TARIFF BRANCH
RECEIVED
7/17/2006
PUBLIC SERVICE
COMMISSION
OF KENTUCKY

ISSUED: JULY 17, 2006
BY: Vice President
Lexington, Kentucky

EFFECTIVE: AUGUST 1, 2006

ACCESS SERVICE

16. ANCILLARY SERVICES (Continued)

16.1 General (Continued)

16.1.5 Rates and Charges (Cont'd)

(7) Message-Billed

Message Bill Processing Service per Message	
0 to 8,740,999 calls	$ .0762
8,741,000 to 11,654,599 calls	.0400
11,654,600 to 17,481,999 calls	.0200
17,482,000 to 26,222,999 calls	.0170
26,223,000 to 32,050,000 calls	.0160
Greater than 32,050,000 calls	.0150

(8) (Reserved for Future Use)

(9) MTS/WATS/800 Service

Bill Rendering Service per Bill	
0 to 206,100	.3500
206,101 to 297,700	.3000
297,701 to 1,282,999	.2700
1,283,000 to 1,373,999	.2500
Greater than 1,373,999	.2300

(10) MTS/WATS/800 Services

Message Investigation, per Message	2.50

(11) General Billing Service

Per Message	.0929
Inquiry Service, per Message	.0078
Adjustment, per Message	2.00

(12) (Reserved for Future Use)

(13) EC Memo, per Account 10.00

(14) Record Keeping, per Account .0300

(15) Centralized Message Dispersion charge, per message .002

TARIFF BRANCH
RECEIVED
7/17/2006
PUBLIC SERVICE COMMISSION OF KENTUCKY

ISSUED: JULY 17, 2006
BY: Vice President
Lexington, Kentucky

EFFECTIVE: AUGUST 1, 2006

ACCESS SERVICE

16. ANCILLARY SERVICES (Cont'd)

16.1 General (Cont'd)

16.1.5 Rates and Charges (Cont'd)

(B) In accordance with 16.1.2(C)(1)(b), the rates and charges will be developed on an individual case basis and listed below.

(Reserved for Future Use)

(C) In accordance with 16.1.2(C)(2)(c), the rates and charges will be developed on an individual case basis and listed below:

(Reserved for Future Use)

TARIFF BRANCH
RECEIVED
7/17/2006
PUBLIC SERVICE
COMMISSION
OF KENTUCKY

ISSUED: JULY 17, 2006
BY: Vice President
Lexington, Kentucky

EFFECTIVE: AUGUST 1, 2006

ACCESS SERVICE

17. RESERVED FOR FUTURE USE

TARIFF BRANCH
RECEIVED
7/17/2006
PUBLIC SERVICE
COMMISSION
OF KENTUCKY

ISSUED: JULY 17, 2006
BY: Vice President
Lexington, Kentucky

EFFECTIVE: AUGUST 1, 2006

ACCESS SERVICE

18. ADVANCED COMMUNICATIONS NETWORKS

This service is no longer available to new Customers.

18.1 General

This section contains the rules and regulations pertaining to the provision of Asynchronous Transfer Mode (ATM) Service. The regulations and rates specified herein are in addition to the applicable regulations and rates specified in other sections of this Tariff.

18.2 Asynchronous Transfer Mode (ATM) Service

18.2.1 General

Asynchronous Transfer Mode (ATM) Service is a form of "fast packet" switching service for high speed networks which require flexible bandwidth, high-performance transport and switching for connectivity between and among widely distributed customer locations. ATM is a cell-based, connection-oriented, switching and multiplexing technology designed to be a fast, general purpose transfer mode for multiple services.

This digital communications service is furnished through facilities provided by Windstream for the provision of a transmission path between two or more customer designated locations.

ATM Service is available where facilities and conditions permit.

18.2.2 Rates and Charges

This service will be provided according to the rates and regulations set forth in the Facilities for Intrastate Access Tariff for Asynchronous Transfer Mode (ATM) Service in Section 16.3.

TARIFF BRANCH
RECEIVED
7/17/2006
PUBLIC SERVICE
COMMISSION
OF KENTUCKY

ISSUED: JULY 17, 2006
BY: Vice President
Lexington, Kentucky

EFFECTIVE: AUGUST 1, 2006

ACCESS SERVICE

19. COLLOCATION SERVICE

19.1 General

Windstream (hereafter referred to as the Company) shall provide collocation services in accordance with, and subject to, the terms and conditions of this tariff and any additional applicable regulations in other Company tariffs. The Company shall provide collocation services under this tariff only to those parties which have an effective interconnection agreement with the Company for this state under Sections 251 and 252 of the Telecommunications Act of 1996, or have adopted such an agreements pursuant to Section 252(i) thereof. Requesting carriers may also seek to negotiate rates, terms, and conditions that are in addition to, or different from, the rates, terms, and conditions in this tariff to the extent permitted by applicable law. As required by applicable law, the Company shall also offer rates, terms, and conditions for collocation services that are not expressly addressed in this tariff or other Company tariffs on Bona Fide Request ("BFR") basis, and in doing so, shall comply with all applicable federal or state requirements. By agreeing to the rates, terms, and conditions of this tariff or the collocation of any equipment hereunder: (1) the Company does not waive, and expressly reserves, its rights to continue to challenge the legality of the FCC Collocation Order (Docket No. 98-147) and to take further action regarding this matter as future circumstances warrant; (2) the Company does not intend to, and therefore does not, establish any precedent, waiver, course of dealing or in any way evidence the Company's position or intent with regard to future collocation requests; and (3) the Company specifically reserves the right to incorporate herein the decision by the United States Court of Appeals for the District of Columbia Circuit on March 17, 2000 (See, GTE Service Corporation, et. al. v. Federal Communications Commission and United States of America, No. 99-1176, consolidated with No. 99-1201, 2000 U.S. App. LEXIS 4111 (D.C. Cir. 2000).

19.1.2 Collocation provides for access to the Company's premises for the purpose of interconnection and/or access to unbundled network elements, including, its central offices, serving wire centers and all other buildings or similar structures owned, leased, or otherwise controlled by the Company that house the Company's network facilities.

19.1.3 Collocation shall be accomplished through Caged or Cageless Collocation, except in those instances where Caged or Cageless Collocation is not practical for technical reasons or due to space limitations. In such cases, the Company shall provide Adjacent Collocation or other methods of collocation, subject to space availability and technically feasibility.

19.1.4 The provision of Collocation by the Company, as set forth in this tariff, does not constitute a joint undertaking with the Competitive Local Exchange Carrier (CLEC) for the furnishing of the services. In addition, the regulations, terms and conditions of this tariff do not apply to any CLEC offering of services to its subscribers.

19.2 Description of Types of Collocation

19.2.1 Single Caged

A single caged arrangement is a form of caged collocation, which allows a single CLEC to lease caged floor space to house its equipment within a Company premises. Additional details on single caged collocation are set forth in the Company's Collocation Services Packet, described in Section 19.3.1 below.

19.2.2 Shared Caged

A shared caged arrangement is a newly constructed caged collocation arrangement that is jointly applied for and occupied by two or more CLECs within a Company premises. When two or more CLECs request establishment and jointly apply for a new caged collocation arrangement to be used as a shared caged arrangement, one of the participating CLECs must agree to be the Host CLEC (Host) and the other(s) to be the Guest CLEC (Guest).

TARIFF BRANCH
RECEIVED
7/17/2006
PUBLIC SERVICE
COMMISSION
OF KENTUCKY

ISSUED: JULY 17, 2006
BY: Vice President
Lexington, Kentucky

EFFECTIVE: AUGUST 1, 2006

ACCESS SERVICE

19. COLLOCATION SERVICE (Cont'd)

19.2 Description of Types of Collocation (Cont'd)

19.2.2 Shared Caged (Cont'd)

The Host and Guest(s) are solely responsible for determining whether to share a shared cage collocation arrangement and if so, upon what terms and conditions. The Host and Guest(s) must each be interconnected to the Company for the exchange of traffic with the Company and/or to access unbundled network elements. The Company will not issue separate billing for any of the rate elements associated with the shared caged collocation arrangement between the Host and the Guest(s), but the Company will provide the Host with information on the proportionate share of the non-recurring charges for each CLEC in the shared arrangement. The Host will be responsible for ordering and payment of all collocation applicable services ordered by the Host and Guest(s). Each Host and Guest will be responsible for ordering their own unbundled network elements from the Company. The Company will separately bill the Host and/or Guest(s) for unbundled network elements ordered.

The Host CLEC and Guest(s) are the Company's customers and have all the rights and obligations applicable hereunder to CLECs purchasing collocation-related services, including, without limitation, the obligation to pay all applicable charges, whether or not the Host is reimbursed for all or any portion of such charges by the Guest(s). All terms and conditions for caged collocation as described in this tariff will apply to shared caged collocation requirements. Additional details on shared caged collocation are set forth in the Company's Collocation Service Packet, described in 19.3.1 following.

19.2.3 Subleased Caged

Vacant space available in a CLEC's existing caged collocation arrangement may be made available to a third party for the purpose of interconnection and/or for access to unbundled network elements in the Company's premises via the subleasing collocation arrangement. Details of subleasing collocation arrangements are set forth in the Company's Collocation Support Packet. The CLEC subleases floor space to the third party pursuant to terms and conditions agreed to by the CLEC and third party involved. The CLEC and third party must each be interconnected to the Company for the exchange of traffic with the Company and/or to access unbundled network elements.

The CLEC is solely responsible for determining whether to sublease a caged collocation arrangement and if so, upon what terms and conditions. The Company will not issue separate billing for any of the rate elements associated with the subleased caged collocation arrangements between the CLEC and the third party. The CLEC will be responsible for ordering and payment of all collocation applicable services ordered by the CLEC and the third party/parties.

Each CLEC and third party will be responsible for ordering their own unbundled network elements from the Company. The Company will separately bill the CLEC and third party/parties for unbundled network elements ordered. The CLEC and third party/parties are the Company's customers and have all the rights and obligations applicable hereunder to CLEC customers purchasing collocation-related services, including, without limitation, the obligation to pay all applicable charges, whether or not the CLEC is reimbursed for all or any portion of such charges by the third party/parties. All terms and conditions for caged collocation as described in this Tariff will apply to subleased caged collocation requirements. Additional details on subleased caged collocation are set forth in the Company's Collocation Services Packet, described in Section 19.3.1 below.

TARIFF BRANCH
RECEIVED
7/17/2006
PUBLIC SERVICE
COMMISSION
OF KENTUCKY

ISSUED: JULY 17, 2006
BY: Vice President
Lexington, Kentucky

EFFECTIVE: AUGUST 1, 2006

ACCESS SERVICE

19. COLLOCATION SERVICE (Cont'd)

19.2 Description of Types of Collocation (Cont'd)

19.2.4 Cageless

Cageless collocation is a form of collocation in which CLECs can place their equipment in Company premises space. A cageless collocation arrangement allows a CLEC, using Company approved vendors, to install equipment in single bay increments in an area designated by the Company. The equipment location will be designated by the Company and will vary based on individual premises configurations. CLEC equipment will not share the same equipment bays with Company equipment. Additional details on subleased caged collocation are set forth in the Company's Collocation Services Packet, described in Section 19.3.1 below.

19.2.5 Adjacent

An adjacent collocation arrangement permits a CLEC to construct or procure a structure on Company property for collocation for the purposes of provisioning expanded interconnection and/or access to unbundled network elements in accordance with the terms and conditions of this tariff. Adjacent collocation is only an option when the following conditions are met:

- Space is legitimately exhausted in the Company's premises for caged and cageless collocation; and

- It is technically feasible to construct or procure a hut or similar structure on Company property that adheres to local building code, zoning requirements, and Company building standards.

The CLEC is responsible for complying with all zoning requirements, any federal, state or local regulations, ordinances and laws, and obtaining all associated permits. The Company may, where required, participate in the zoning approval and permit acquisitions. The CLEC may not take any action in establishing an adjacent structure that will force the Company to violate any zoning requirements or any federal, state or local regulations, ordinances, or laws.

Any construction by the CLEC on Company property must comply with Company technical specifications as they relate to environmental safety and grounding requirements set forth in the Company's Collocation Services Packet. The Company will make available power and physical collocation services to the CLEC in the same non-discriminatory manner as it provides to itself for the Company's own Remote Equipment Buildings (REBs).

Additional details on adjacent collocation are set forth in the Company's Collocation Services Packet, described in Section 19.3.1 below.

19.2.6 Other

A CLEC shall have the right to order collocation services offered pursuant to the Company's other tariffs, including, without limitation, the right to order virtual collocation services in accordance with, and subject to, the terms and conditions of the Company's existing federal collocation tariff (GTOC Tariff FCC No. 1).

Physical collocation of microwave transmission facilities will be permitted except where such collocation is not practical for technical reasons or because of space limitations. Requests for collocation of microwave transmission facilities are to be submitted via a BFR.

TARIFF BRANCH
RECEIVED
7/17/2006
PUBLIC SERVICE
COMMISSION
OF KENTUCKY

ISSUED: JULY 17, 2006
BY: Vice President
Lexington, Kentucky

EFFECTIVE: AUGUST 1, 2006

ACCESS SERVICE

19. COLLOCATION SERVICE (Cont'd)

19.3 Ordering Conditions

19.3.1 Application

(A) Point of Contact/Collocation Services Packet

The Company will establish points of contact for the CLEC to contact to place a request for collocation. The point of contact will provide the CLEC with the Collocation Services Packet, which shall contain general information and requirements, including a list of engineering and technical specifications, fire, safety, security policies and procedures, and an application form.

(B) Application Form/Fee

CLECs requesting collocation at a premises will be required to complete the application form and submit the non-refundable engineering fee set forth in 19.14 following for each premises at which collocation is requested. The application form will require the CLEC to provide all engineering, floor space, power, environmental and other requirements necessary for the function of the service. The CLEC will also provide the Company with specifications for any non-standard or special requirements at the time of application. The Company reserves the right to assess the CLEC any additional charges not included in 19.14 following on an individual case basis (ICB) associated with complying with the application request.

The Company will process collocation requests from CLECs on a first-come, first-serve basis pursuant to the Company's receipt of a completed application form and the non-refundable engineering fee.

(C) Notification of Acceptance/Rejection

The Company will notify the CLEC in writing within eight (8) business days following receipt of the completed application if the CLEC's requirements cannot be accommodated as specified. If the application is deficient, the Company will specify in writing, within eight (8) business days, the information that must be provided by the CLEC in order to complete the application. A CLEC that resubmits a revised application curing any deficiencies in their original application within ten (10) calendar days after being informed of them shall retain its position within the collocation application queue.

(D) Changes

The first application form submitted by the CLEC shall be designated the original application. Original applications for collocation arrangements that have not been inspected and approved by the CLEC are subject to requests for minor or major changes to the services requested in the application. Changes will not be initiated until a completed application has been submitted along with the appropriate Engineering Fee, if applicable.

Major changes are requests that add telecommunications equipment that requires additional AC or DC power systems; heating, ventilation and air conditioning (HVAC) system modifications; or change the size of the cage. At the election of the CLEC, major changes may be handled in one of the following two methods to the extent technically feasible.

TARIFF BRANCH
RECEIVED
7/17/2006
PUBLIC SERVICE
COMMISSION
OF KENTUCKY

ISSUED: JULY 17, 2006
BY: Vice President
Lexington, Kentucky

EFFECTIVE: AUGUST 1, 2006

ACCESS SERVICE

19. COLLOCATION SERVICE (Cont'd)

19.3 Ordering Conditions (Cont'd)

19.3.1 Application (Cont'd)

(D) Changes (Cont'd)

(1) Method 1: Additional Application

The CLEC may elect to have a major change to its original collocation application treated by the Company as an additional (new) application. An additional application is subject to the same provisioning process and conditions as an original application. On receipt of a complete additional application and Engineering Fee, the Company will notify the CLEC in writing within eight (8) business days following receipt of the completed additional application if the CLEC's additional requirements cannot be accommodated as specified. Filing an additional application does not change the Company's obligation to process and fulfill the original application nor does it change the time intervals applicable to the processing and fulfillment of the original application. All of the provisions herein applicable to an original application similarly apply to an additional application.

(2) Method 2: Supplemental Application

The CLEC may elect to have a major change to its original collocation application treated by the Company as a supplemental application. A supplemental application may affect the Company's obligation to process and fulfill the original application. On receipt of a supplemental application and Engineering Fee, the Company will notify the CLEC in writing within eight (8) business days following receipt of the completed supplemental application if the CLEC's requirements cannot be accommodated as specified. Upon notification that the Company can accommodate the requirements of the supplemental application, the CLEC may elect to proceed with the supplemental application. The Company's obligations under the original application will be merged with the obligations of the supplemental application and the combined project time line will be based on the date the supplemental application was received. All of the provisions herein applicable to an original application similarly apply to a supplemental application.

Minor changes are those requests that do not require additional AC or DC power systems, HVAC system upgrades, or changes in cage space. The CLEC will be required to submit a revised application, but the deliverable dates for the project will not change.

TARIFF BRANCH
RECEIVED
7/17/2006
PUBLIC SERVICE
COMMISSION
OF KENTUCKY

ISSUED: JULY 17, 2006
BY: Vice President
Lexington, Kentucky

EFFECTIVE: AUGUST 1, 2006

ACCESS SERVICE

19. COLLOCATION SERVICE (Cont'd)

19.3 Ordering Conditions (Cont'd)

19.3.2 Space Availability

Subject to Section 19.4.2 following, the Company will notify the CLEC within eight (8) business days following receipt of the completed application form and non-refundable engineering fee, if space is available at the selected premises. The response will be one of the following:

(1) There is space and the Company will proceed with the arrangement.
(2) There is no space. The Company will proceed as described in 19.5.1 following.
(3) There is no readily available space, however the Company will determine whether space can be made available and will notify the CLEC within twenty (20) business days. At the end of this period, the Company will proceed as described in (1) or (2) above.

19.3.3 Price Quote

The Company shall provide the CLEC with a price quote for collocation services required to accommodate the CLEC's request within eight (8) business days of the application date, provided that no individual case basis (ICB) rates are required in the quote. The CLEC shall have five (5) business days from receipt of the quote to inform the Company, in writing, of its intent to proceed with their collocation request and pay fifty percent (50%) of the applicable Non-Recurring Charges (NRCs), set forth in 19.14 following, associated with the ordered collocation services. The remaining 50% will be billed by the Company upon completion of the collocation request.

19.3.4 ASR

Upon notification of available space, the CLEC will be required to send a completed Access Service Request (ASR) form to the Company's collocation point of contact. A copy of an ASR form is included in the Collocation Services Packet.

19.3.5 Augmentation

All requests for an addition or change to an existing collocation arrangement that has been inspected and turned over to the CLEC is considered an augmentation. An augmentation request will require the submission of a complete application form and a non-refundable Engineering or Minor Augment fee. A Minor Augment fee may not be required under certain the circumstances outlined below. The definition of a major or minor augment is as follows:

(A) Major Augments are those requests that require AC or DC power, add equipment that generates more BTUs of heat, or an increase in the caged floor space, over what the CLEC requested in its original application. A complete application and Engineering Fee will be required when submitting a caged or cageless request that requires a major augment.

TARIFF BRANCH
RECEIVED
7/17/2006
PUBLIC SERVICE
COMMISSION
OF KENTUCKY

ISSUED: JULY 17, 2006
BY: Vice President
Lexington, Kentucky

EFFECTIVE: AUGUST 1, 2006

ACCESS SERVICE

19. COLLOCATION SERVICE (Cont'd)

19.3 Ordering Conditions (Cont'd)

19.3.5 Augmentation (Cont'd)

(B) Minor Augments of caged and cageless collocation arrangements will require the submission of a complete application form and the Minor Augment Fee. Minor augments are those requests that do not require more AC or DC power, add equipment that generates more BTUs of heat, or increase the caged floor space, over what the CLEC requested in its original application. The requirements for a minor augment request can not exceed the capacity of the existing electrical/power or HVAC system. Requests for Collocator to Collocator interconnects and DSO, DS1, and DS3 cross connects are included as minor augments.

Minor augments that require an augment fee are those requests that require the Company to perform a service or function on behalf of the CLEC including but not limited to: requests to pull cable for CLEC to CLEC interconnects, DSO, DS1, and DS3 facility terminations.

Minor augments that do not require a fee are those augments performed solely by the CLEC, that do not require the Company to provide a service or function on behalf of the CLEC, including but not limited to, requests to install additional equipment in the CLEC's cage. Prior to the installation of the additional equipment the CLEC agrees to provide the Company with an application form with an updated equipment listing that includes the equipment to be installed in the CLEC's collocation arrangement. Once the updated equipment list is submitted to the Company, the CLEC may proceed with the augment. The CLEC agrees that changes in equipment provided by the CLEC under this provision will not exceed the engineering specifications for power and HVAC as requested on the original application. All augments will be subject to Company inspection, in accordance with the terms of this tariff for the purpose of ensuring compliance with Company safety standards.

19.3.6 Expansion

The Company will not be required to construct additional space to provide for caged, cageless and/or adjacent collocation when available space has been exhausted. Where the CLEC seeks to expand its existing collocation space, the Company shall make contiguous space available to it to the extent possible; provided, however, the Company does not guarantee contiguous space to the CLEC to expand its existing collocation space. CLEC requests for expansion of existing space within a specific premises will require the submission of an application form and the appropriate major augment fee.

19.3.7 Relocation

CLEC requests for relocation of the termination equipment from one location to a different location within the same premises will be handled on an ICB basis. The CLEC will be responsible for all costs associated with the relocation of its equipment.

TARIFF BRANCH
RECEIVED
7/17/2006
PUBLIC SERVICE
COMMISSION
OF KENTUCKY

ISSUED: JULY 17, 2006
BY: Vice President
Lexington, Kentucky

EFFECTIVE: AUGUST 1, 2006

ACCESS SERVICE

19. COLLOCATION SERVICE (Cont'd)

19.4 Installation and Operation (Cont'd)

19.4.2 Forecasting and Use of Data

(A) The Company will request Caged and Cageless forecasts from the CLEC on a semi-annual basis, with each forecast covering a two-year period. The CLEC will be required to update the near-term (6-month) forecasted application dates. Information requested will include central office, month applications are expected to be sent, requested in-service month, preference for Caged or Cageless collocation, and square footage required.

(B) Unforecasted demand will be given a lesser priority than forecasted demand. The Company will make every attempt to meet standard intervals for unforecasted requests. However, if unanticipated requests push demand beyond the Company's capacity limits, the Company will negotiate longer intervals as required (and within reason). In general, if forecasts are received less than two (2) months prior to the application date, the interval start day may be postponed as follows:

- No forecast: Interval Start Date commences 2 months after application date.

- Forecast received 1 month prior to application date: Interval Start Date commences 2 months after application date.

- Forecast received 2 months prior to application date: Interval Start Date commences 1 month after application date.

Any such interval adjustments will be discussed with the CLEC at the time the application is received.

19.4.3 Collocation Capacity

(A) The Company's estimate of its present capacity (i.e. no more than an increase of 15% over the average number of applications received for the preceding three months in a particular geographic area) is based on current staffing and current vendor arrangements. If the forecasts indicate spikes in demand, the Company will attempt to smooth the demand via negotiations with the forecasting CLECs. If the Company and the CLEC fail to agree to smooth demand, the Company will determine if additional expenditures would be required to satisfy the spikes in demand and will work the Commission Staff to determine whether such additional expenditure is warranted and to evaluate cost recovery options.

(B) If the Company augments its workforce based on forecasts, the Company reserves the right to hold CLECs accountable for the accuracy of their forecasts.

19.4.4 Vendor Capacity

The Company will continuously seek to improve vendor performance for all premises work, including collocation. Since the vendors require notice in order to meet increases in demand, the Company will share CLEC actual and forecasted demand with appropriate vendors, as required, subject to the appropriate confidentiality safeguards. The Company will seek assistance from the CLECs to resolve vendor inability to meet demands.

TARIFF BRANCH
RECEIVED
7/17/2006
PUBLIC SERVICE
COMMISSION
OF KENTUCKY

ISSUED: JULY 17, 2006
BY: Vice President
Lexington, Kentucky

EFFECTIVE: AUGUST 1, 2006

ACCESS SERVICE

19. COLLOCATION SERVICE (Cont'd)

19.4 Installation and Operation (Cont'd)

19.4.5 Responsibility for Vendor Delays

No party shall be excused from their obligations due to the acts or omissions of a Party's subcontractors, material, men, suppliers or other third persons providing such products or services to such Party unless such acts or omissions are the product of a Force Majeure Event, or unless such delay or failure and the consequences thereof are beyond the reasonable control and without the fault or negligence of the Party claiming excusable delay or failure to perform.

19.4.6 Space Preparation

(A) Cage Construction

For caged collocation, the Company will construct the cage with a standard enclosure or the CLEC may subcontract this work to a Company approved contractor.

(B) Site Selection/Power

The Company shall designate the space within its premises where the CLEC shall collocate its equipment. The Company shall provide, at the rates set forth in 17.14 following, 48V DC power with generator and/or battery back-up, AC convenience outlet, heat, air conditioning and other environmental support to the CLEC equipment in the same standards and parameters required for Company equipment within that premises. The Company will be responsible for the installation of the AC convenience outlets, overhead lighting and equipment superstructure per the established rates.

19.4.7 Equipment and Facilities

(A) Purchase of Equipment

The CLEC will be responsible for supply, purchase, delivery, installation and maintenance of its equipment and equipment bay(s) in the collocation area. The Company is not responsible for the design, engineering, or performance of CLEC equipment and provided facilities for collocation.

(B) Permissible Equipment

The CLEC is permitted to place in its collocation space only equipment that is necessary for interconnection or access to unbundled network elements. The CLEC shall not place in its collocation space equipment that is designed exclusively for switching or enhanced services and that are not necessary for interconnection or access to unbundled network elements. The CLEC may place in its collocation space ancillary equipment such as cross connect frames, and metal storage cabinets. However, metal storage cabinets must meet Company premises environmental standards.

TARIFF BRANCH
RECEIVED
7/17/2006
PUBLIC SERVICE
COMMISSION
OF KENTUCKY

ISSUED: JULY 17, 2006
BY: Vice President
Lexington, Kentucky

EFFECTIVE: AUGUST 1, 2006

ACCESS SERVICE

19. COLLOCATION SERVICE (Cont'd)

19.4 Installation and Operation (Cont'd)

19.4.7 Equipment and Facilities (Cont'd)

(C) Specifications

The CLEC facilities shall not physically, electronically, or inductively interfere with or impair the service of the Company's or any other CLEC facilities, create hazards or cause physical harm to any individual or the public. All CLEC equipment used for Caged and Cageless Collocation must be tested to, and must meet: (1) the NEBS Level 1 family of safety requirements as defined in the Company's NEBS requirements RNSA-NEB-95-0003, Revision 10 or higher; and (2) the specific risk/safety/hazard criteria specified in Addendum E of the Collocation Services Packet. Any CLEC equipment that does not conform to these requirements may not be installed on Company property.

The Company reserves the right to remove and/or refuse use of CLEC facilities and equipment from its list of approved products if such products, facilities and equipment are determined to be no longer compliant with NEBS Level 1 safety standards or Electromagnetic Compatibility and Electrical Safety Generic Criteria for Network Telecommunication Equipment (GR-1089-CORE). The Company also reserves the right to remove and/or refuse use of CLEC facilities or equipment which does not meet or comply with the NEBS equipment safety requirements specified in Addendum E of the Collocation Services Packet.

(D) Cable

The CLEC is required to provide proper cabling, based on circuit type (VF, DS0, xDSL, DS1, DS3, etc.) to ensure adequate shielding. The Company cable standards (which are set forth in the Collocation Services Packet) are required to reduce the possibility of interference. The CLEC is responsible for providing fire retardant riser cable that meets Company standards. The Company is responsible for placing the CLEC's fire retardant riser cable from the cable vault to the collocation space. The Company is responsible for installing CLEC provided fiber optic cable in the cable space or conduit from the first manhole to the premises. This may be shared conduit with dedicated innerduct.

If the CLEC provides its own fiber optic facility, then the CLEC shall be responsible for bringing its fiber optic cable to the premises manhole. The CLEC must leave sufficient cable length for the Company to be able to fully extend such cable through to the CLEC's collocation space.

TARIFF BRANCH
RECEIVED
7/17/2006
PUBLIC SERVICE
COMMISSION
OF KENTUCKY

ISSUED: JULY 17, 2006
BY: Vice President
Lexington, Kentucky

EFFECTIVE: AUGUST 1, 2006

ACCESS SERVICE

19. COLLOCATION SERVICE (Cont'd)

19.4 Installation and Operation (Cont'd)

19.4.7 Equipment and Facilities (Cont'd)

(E) Manhole/Splicing Restrictions

The Company reserves the right to prohibit all equipment and facilities, other than fiber optic cable, from its entrance manholes. The CLEC will not be permitted to splice fiber optic cable in Manhole #1 (first Company manhole outside of the wire center). Where the CLEC is providing underground fiber optic cable in Manhole #1, it must be of sufficient length as specified by the Company to be pulled through the premises conduit to the CLEC collocation arrangement. The Company is responsible for installing a cable splice, if necessary, where CLEC provided fiber optic cable meets Company standards within the premises cable vault or designated splicing chamber. The Company will provide space and racking for the placement of an approved secured fire retardant splice enclosure.

(F) Access Points and Restrictions

The interconnection point for caged and cageless collocation is the point where CLEC-owned cable facilities connect to Company termination equipment. The demarcation point for the CLEC is its terminal equipment or interconnect/cross connect panel within its cage, bay/frame or cabinet. The CLEC must tag all entrance facilities to indicate ownership. The CLEC will not be allowed access to Company DSX line-ups, MDF or any other Company facility termination points. The DSX and MDF are to be considered Company demarcation points only. Only Company employees, agents or contractors will be allowed access to the MDF or DSX to terminate facilities, test connectivity, run jumpers and/or hot patch in-service circuits.

(G) Staging Area

For caged and cageless collocation arrangements, the CLEC shall have the right to use the designated staging area, a portion of the premises and loading areas, if available, on a temporary basis during its equipment installation work in the collocation space. The CLEC is responsible for protecting the Company's equipment and premises walls and flooring within the staging area and along the staging route. The CLEC will meet all Company fire, safety, security and environmental requirements. The temporary staging area will be vacated and delivered to the Company in an acceptable condition upon completion of the installation work. The CLEC may also utilize a staging trailer, which can be located on the exterior premises. The Company may assess the CLEC a market value lease rate for the area occupied by the trailer.

TARIFF BRANCH
RECEIVED
7/17/2006
PUBLIC SERVICE
COMMISSION
OF KENTUCKY

ISSUED: JULY 17, 2006
BY: Vice President
Lexington, Kentucky

EFFECTIVE: AUGUST 1, 2006

ACCESS SERVICE

19. COLLOCATION SERVICE (Cont'd)

19.4 Installation and Operation (Cont'd)

19.4.7 Equipment and Facilities (Cont'd)

(H) Testing

Upon installation of the CLEC equipment, with prior notice, the Company will schedule time to work with the CLEC during the turn-up phase of the equipment to ensure proper functionality between CLEC equipment and the connections to Company equipment. The time period for this to occur will correspond to the Company's maintenance window installation requirements. The CLEC is solely responsible to provide its own monitor and test points, if required, for connection directly to their terminal equipment.

(I) Collocator to Collocator Interconnect Arrangements

The Company shall provide, upon the CLEC's request, a Collocator to Collocator Interconnect arrangement between its equipment and the equipment of other collocated CLECs. When initiating a Collocator to Collocator Interconnect request, the CLEC must submit an Application Form, ASR, and a Minor Augment Fee. The Company will be responsible for engineering and installing the overhead superstructure for the Collocator to Collocator Interconnect arrangement, if required, and determining the appropriate cable route.

The CLEC has the option of providing all cables and connectors for the arrangement and the option of running the cables for the Collocator to Collocator Interconnect Arrangement. If the Company provides the cables and connectors and/or runs the cable, the applicable cable and labor rates in 19.14 following will be applied.

TARIFF BRANCH
RECEIVED
7/17/2006
PUBLIC SERVICE
COMMISSION
OF KENTUCKY

ISSUED: JULY 17, 2006
BY: Vice President
Lexington, Kentucky

EFFECTIVE: AUGUST 1, 2006

ACCESS SERVICE

19. COLLOCATION SERVICE (Cont'd)

19.4 Installation and Operation (Cont'd)

19.4.8 Access to Collocation Space

The Company will permit CLEC employees, agents, and contractors approved by the Company to have direct access to CLEC caged or cageless collocated equipment and the Company's restroom facilities twenty-four (24) hours a day, seven (7) days a week. CLEC employees, agents, or contractors must comply with the policies and practices of the Company pertaining to fire, safety, and security as described in the Company's Security Procedures and Requirements Guidelines, which are attached to the Collocation Services Packet. The Company reserves the right, with 24 hours prior notice to the CLEC, to access the CLEC's collocated partitioned space to perform periodic inspections to ensure compliance with Company installation, safety and security practices. Where the CLEC shares a common entrance to the premises with the Company, the reasonable use of shared building facilities, e.g., elevators, unrestricted corridors, etc., will be permitted. Windstream reserves the right to permanently remove and/or deny access from Company premises any CLEC employee, agent, or contractor who violates the Company's policies, work rules, or business conduct standards, or otherwise poses a security risk to the Company.

19.4.9 Network Outage, Damage and Reporting

The CLEC shall be responsible for:

- Any damage or network outage occurring as a result of CLEC owned or designated termination equipment in Company premises;
- Providing trouble report status when requested;
- Providing a contact number that is readily accessible 24 hours a day, 7 days a week;
- Notifying the Company of significant outages which could impact or degrade the Company's switches and services and provide estimated clearing time for restoral; and
- Testing its equipment to identify and clear a trouble report when the trouble has been sectionalized (isolated) to a CLEC service.

The Company will make every effort to contact the CLEC in the event CLEC equipment disrupts the network. If the Company is unable to make contact with the CLEC, the Company shall temporarily disconnect the CLEC's service, as provided in 19.4.11 following.

TARIFF BRANCH
RECEIVED
7/17/2006
PUBLIC SERVICE
COMMISSION
OF KENTUCKY

ISSUED: JULY 17, 2006
BY: Vice President
Lexington, Kentucky

EFFECTIVE: AUGUST 1, 2006

ACCESS SERVICE

19. COLLOCATION SERVICE (Cont'd)

19.4 Installation and Operation (Cont'd)

19.4.10 Security Requirements

(A) Background Tests; Training

All employees, agents and contractors of the CLEC must meet certain minimum requirements as set forth in the Company's Collocation Service Packet. When the CLEC submits the collocation ASR for caged or cageless collocation, or as soon as reasonably practicable thereafter, the CLEC must submit to the Company's Security Department, for prior approval, the background investigation certification form included in the Collocation Service Packet for all employees, agents and contractors that will require access to Company premises. The CLEC must agree that its employees/vendors with access to Company premises shall at all times adhere to the rules of conduct established by the Company for the premises and Company personnel and vendors. The Company reserves the right to make changes to such procedures and rules to preserve the integrity and operation of Company network or facilities or to comply with applicable laws and regulations. The Company will provide the CLEC with written notice of such changes. Where applicable, the Company will provide information to the CLEC on the specific type of security training required so its employees can complete such training.

(B) Security Standards

The Company will be solely responsible for determining the appropriate level of security in each premises. The Company reserves the right to deny access to Company buildings for any CLEC employee, agent or contractor who cannot meet the Company's established security standards. Employees, agents or contractors of the CLEC are required to meet the same security requirements and adhere to the same work rules that Company employees and contractors are required to follow.

The Company also reserves the right to deny access to Company buildings for CLEC employees, agents and contractors for falsification of records, violation of fire, safety or security practices and policies or other just cause.

TARIFF BRANCH
RECEIVED
7/17/2006
PUBLIC SERVICE
COMMISSION
OF KENTUCKY

ISSUED: JULY 17, 2006
BY: Vice President
Lexington, Kentucky

EFFECTIVE: AUGUST 1, 2006

ACCESS SERVICE

19. COLLOCATION SERVICE (Cont'd)

19.4 Installation and Operation (Cont'd)

19.4.10 Security Requirements (Cont'd)

(B) Security Standards (Cont'd)

CLEC employees, agents or contractors who meet the Company's established security standards will be provided access to the CLEC's collocation equipment and the Company's restroom facilities 24 hours a day, seven days a week. If CLEC employees, agents or contractors request and are granted access to other areas of the Company's premises, a Company employee, agent to contractor may accompany and observe the CLEC employee(s), agent(s) or contractor(s) at no cost to the CLEC.

The Company may use reasonable security measures to protect its equipment, including, for example, enclosing its equipment in its own cage or other separation, utilizing monitored card reader systems, digital security cameras, badges with computerized tracking systems, identification swipe cards, keyed access and/or logs, as deemed appropriate by the Company.

(C) Access Cards/Identification

Access cards or keys will be provided to no more than a reasonable number of CLEC appointed individuals for each Company premises. All CLEC employees, agents and contractors requesting access to the premises are required to have a photo identification card, which identifies the person by name and the name of the CLEC. The ID must be worn on the individual's exterior clothing while on Company premises. The Company will provide the CLEC with instructions and necessary access cards or keys to obtain access to Company buildings.

The CLEC is required to immediately notify the Company by the most expeditious means, when any CLEC employee, agent or contractor with access privileges to Company buildings is no longer in its employ, or when keys, access cards or other means of obtaining access to Company buildings are lost, stolen or not returned by an employee, agent or contractor no longer in its employ. The CLEC is responsible for the immediate retrieval and return to the Company all keys, access cards or other means of obtaining access to Company buildings upon termination of employment of an employee and/or termination of service. The CLEC shall be responsible for the replacement cost of keys, access cards or other means of obtaining access when lost, stolen or upon failure of it or its employee, agent or contractor to return them to the Company.

TARIFF BRANCH
RECEIVED
7/17/2006
PUBLIC SERVICE
COMMISSION
OF KENTUCKY

ISSUED: JULY 17, 2006
BY: Vice President
Lexington, Kentucky

EFFECTIVE: AUGUST 1, 2006

ACCESS SERVICE

19. COLLOCATION SERVICE (Cont'd)

19.4 Installation and Operation (Cont'd)

19.4.11 Emergency Access

The CLEC is responsible for providing a contact number that is readily accessible 24 hours a day, 7 days a week. The CLEC will provide access to its collocation space at all times to allow the Company to react to emergencies, to maintain the building operating systems (where applicable and necessary) and to ensure compliance with OSHA/Company regulations and standards related to fire, safety, health and environmental safeguards. The Company will attempt to notify the CLEC in advance of any such emergency access. If advance notification is not possible the Company will provide notification of any such entry to the CLEC as soon as possible following the entry, indicating the reasons for the entry and any actions taken which might impact CLEC facilities or equipment and its ability to provide service. The Company will restrict access to CLEC collocation space to persons necessary to handle such an emergency.

The emergency provisioning and restoration of interconnection service shall be in accordance with Part 64, Subpart D, Paragraph 64.401, of the FCC's Rules and Regulations, which specifies the priority for such activities. The Company reserves the right, without prior notice, to access CLEC collocation space in an emergency, such as fire or other unsafe conditions, or for purposes of averting any threat of harm imposed by the CLEC or CLEC equipment upon the operation of Company equipment, facilities and/or employees located outside the CLEC's collocation space. The Company will notify the CLEC as soon as possible when such an event has occurred.

In case of a Company work stoppage, CLEC employees, contractors or agents will comply with the emergency operation procedures established by the Company. Such emergency procedures should not directly affect CLEC access to its premises, or ability to provide service. The CLEC will notify the Company point of contact of any work stoppages by CLEC employees.

TARIFF BRANCH
RECEIVED
7/17/2006
PUBLIC SERVICE
COMMISSION
OF KENTUCKY

ISSUED: JULY 17, 2006
BY: Vice President
Lexington, Kentucky

EFFECTIVE: AUGUST 1, 2006

ACCESS SERVICE

19. COLLOCATION SERVICE (Cont'd)

19.5 Space Requirements

19.5.1 Space Availability

If the Company is unable to accommodate caged and cageless collocation requests at a premises due to space limitations or other technical reasons, the Company will post a list of all such sites on its Website and will update the list within ten (10) calendar days of the date at which a premises runs out of caged and cageless collocation space. This information will be listed at the following public Internet URL:

http://www.gte.com/regulatory

Where the Company is unable to accommodate caged and cageless collocation requests at a premises due to space limitations or other technical reasons, the Company shall:

(A) Submit to the state commission, subject to any protective order as the state commission may deem necessary, detailed floor plans or diagrams of the premises which show what space if any, the Company or any of its affiliates has reserved for future use; and describe in detail the specific future uses for which the space has been reserved and the length of time for each reservation; and

(B) Allow the CLEC to tour the entire premises, without charge, within ten (10) calendar days of the tour request.

19.5.2 Minimum/Maximum/Additional Space

The minimum amount of floor space available to each CLEC at the time of the initial application will be twenty-five (25) square feet of caged collocation space or one (1) single bay in the case of cageless collocation. The maximum amount of space available in a specific premises to each CLEC will be limited to the amount of existing suitable space which is technically feasible to support the collocation arrangement requested. Existing suitable space is defined as available space in a premises which does not require the addition of AC/DC power, heat and air conditioning, battery and/or generator back-up power and other requirements necessary for provisioning collocation services. The Company will not deny a CLEC's collocation request if vacant, unconditioned space is the only space available for collocation. The Company will modify the vacant, unconditioned space to suitable space in order to support the collocation arrangement requested. Additional space requested for an existing caged, cageless and/or adjacent collocation arrangement will be provided on a per request basis, where feasible, and where space is being efficiently used.

TARIFF BRANCH
RECEIVED
7/17/2006
PUBLIC SERVICE
COMMISSION
OF KENTUCKY

ISSUED: JULY 17, 2006
BY: Vice President
Lexington, Kentucky

EFFECTIVE: AUGUST 1, 2006

ACCESS SERVICE

19. COLLOCATION SERVICE (Cont'd)

19.5 Space Requirements (Cont'd)

19.5.2 Minimum/Maximum/Additional Space (Cont'd)

Additional space can be requested by a CLEC by completing and submitting a new application form and the applicable non-refundable engineering fee set forth in 19.14. The Company will not be required to lease additional space when available collocation space has been exhausted.

19.5.3 Use of Space

The Company and CLEC will work cooperatively to determine proper space requirements, and efficient use of space. In addition to other applicable requirements set forth in this tariff, the CLEC shall install all its equipment within its designated area in contiguous line-ups in order to optimize the utilization of space within Company premises. The CLEC shall use the collocation space solely for the purposes of installing, maintaining and operating its equipment to interconnect for the exchange of traffic with the Company and/or for purposes of accessing unbundled network elements. The CLEC shall not construct improvements or make alterations or repairs to the collocation space without the prior written approval of the Company. The collocation space may not be used for administrative purposes and may not be used as CLEC employee(s) work location, office or retail space, or storage. The collocation space shall not be used as the CLEC's mailing or shipping address.

19.5.4 Reservation of Space

The Company reserves the right to manage its own premises conduit requirements and to reserve vacant space for planned facilities. The Company will retain and reserve a limited amount of vacant floor space within its premises for its own specific future uses on terms no more favorable than applicable to other CLECs seeking to reserve collocation space for their future use. If the remaining vacant floor space within a premises is reserved for the Company's and its affiliates' own specific future use, the premises will be exempt from future caged and cageless collocation requests in accordance with the guidelines and procedures in 19.5.1. The CLEC shall not be permitted to reserve premises cable space or conduit system. If new conduit is required, the Company will negotiate with the CLEC to determine an alternative arrangement for the specific location. The CLEC will be allowed to reserve collocation space for its caged/cageless arrangements based on its documented forecast provided to the Company and subject to space availability. Such forecast must demonstrate a legitimate need to reserve the space for use on terms no more favorable than applicable to the Company seeking to reserve vacant space for its own specific use. CLEC Cageless collocation bays may not be used solely for the purpose of storing CLEC equipment.

TARIFF BRANCH
RECEIVED
7/17/2006
PUBLIC SERVICE
COMMISSION
OF KENTUCKY

ISSUED: JULY 17, 2006
BY: Vice President
Lexington, Kentucky

EFFECTIVE: AUGUST 1, 2006

ACCESS SERVICE

19. COLLOCATION SERVICE (Cont'd)

19.5 Space Requirements (Cont'd)

19.5.5 Collocation Space Report

Upon request by the CLEC and upon its signing a collocation nondisclosure agreement, the Company will make available a Collocation Space Report with the following information for the premises requested:

- Amount of caged and cageless collocation space available;
- Number of telecommunications carriers with existing collocation arrangements;
- Modifications of the use of space since the last Collocation Space Report requested; and,
- Measures being taken, if any, to make additional Collocation spaces available.

The Collocation Space Report is not required prior to the submission of a collocation application for a specific premises in order to determine collocation space availability for the premises. The Collocation Space Report will be provided to a CLEC within ten (10) calendar days of the request, provided the request is submitted during the ordinary course of business. A Collocation Space Report fee will be assessed per request and per premises.

19.5.6 Reclamation

When initiating an application form, the CLEC must have started installing equipment approved for collocation at the Company premises within a reasonable period of time, not to exceed six (6) months from the date the collocation arrangement is accepted. If the CLEC does not utilize its collocation space within the established time period, and has not met the space reservation requirements of 19.5.4 preceding, the Company may reclaim the unused collocation space to accommodate another CLEC request or the Company's future space requirements.

The Company shall have the right, for good cause shown, and upon six (6) months' notice, to reclaim any collocation space, cable space or conduit space in order to fulfill its obligation under public service law and its tariffs to provide telecommunication services to its end users. In such cases, the Company will reimburse the CLEC for reasonable direct costs and expenses in connection with such reclamation. The Company will make every reasonable effort to find other alternatives before attempting to reclaim any such space.

TARIFF BRANCH
RECEIVED
7/17/2006
PUBLIC SERVICE
COMMISSION
OF KENTUCKY

ISSUED: JULY 17, 2006
BY: Vice President
Lexington, Kentucky

EFFECTIVE: AUGUST 1, 2006

ACCESS SERVICE

19. COLLOCATION SERVICE (Cont'd)

19.6 Indemnification

In addition to their other respective indemnification and liability obligations hereunder, the Company and CLEC shall meet the following obligations. To the extent that this provision conflicts with any other provision in this Tariff, this provision shall control.

The Indemnifying Party shall defend, indemnify and save harmless the Indemnified Party, its directors, officers, employees, servants, agents, affiliates and parent from and against any and all suits, claims, demands, losses, claims, and causes of action and costs, including reasonable attorneys' fees, whether suffered, made, instituted or asserted by the Indemnifying Party or by any other party, which are caused by, arise out of or are in any way related to:

(A) The installation, maintenance, repair, replacement, presence, engineering, use or removal of Indemnifying Party's equipment or by the proximity of such equipment to the equipment of other parties occupying space in Company premises, including, without limitation, damages to property and injury or death to persons, including payments made under Workers' Compensation Law or under any plan for employees' disability and death benefits;

(B) The Indemnifying Party's failure to comply with any of the terms of this tariff; or

(C) Any act or omission of the Indemnifying Party, its employees, agents, affiliates, former or striking employees or contractors.

Subject to any limitations of liability set forth in this tariff, the Indemnifying Party shall be liable to the Indemnified Party only for and to the extent of any damage directly and primarily caused by the negligence of the Indemnifying Party. The Indemnifying Party shall not be liable to the Indemnified Party or its customers for any interruption of Indemnified Party's service or for interference with the operation of Indemnified Party's designated facilities arising in any manner out of the Indemnified Party's presence in Company premises, unless such interruption or interference is caused by the Indemnifying Party's willful misconduct. In no event shall the Indemnifying Party or any of its directors, officers, employees, servants, agents, affiliates and parent be liable for any loss of profit or revenue by the Indemnified Party or for any loss of AC or DC power, HVAC interruptions, consequential, incidental, special, punitive or exemplary damages incurred or suffered by the Indemnified Party, even if the Indemnified Party has been advised of the possibility of such loss or damage.

TARIFF BRANCH
RECEIVED
7/17/2006
PUBLIC SERVICE
COMMISSION
OF KENTUCKY

ISSUED: JULY 17, 2006
BY: Vice President
Lexington, Kentucky

EFFECTIVE: AUGUST 1, 2006

ACCESS SERVICE

19. COLLOCATION SERVICE (Cont'd)

19.6 Indemnification (Cont'd)

The obligations, rights and limitations of section 19.6 shall survive the termination, cancellation, modification or recession of this Tariff, without limit as to time. For purposes of this section, the terms "Indemnifying Party" and "Indemnified Party" can mean either the Company or the CLEC, as is appropriate under the context. Both the Company and the CLEC shall have or be entitled to the obligations, rights and limitations described in this section.

19.7 Insurance

19.7.1 Coverage Requirements

The CLEC shall, at its sole cost and expense, obtain, maintain, pay for and keep in force the following minimum insurance, underwritten by an insurance company(s) having a Best's insurance rating of at least A-, financial size category VII.

(A) Commercial general liability coverage on an occurrence basis in an amount of $1,000,000 combined single limit for bodily injury and property damage with a policy aggregate per location of $2,000,000. This coverage shall include contractual liability.

(B) Umbrella/Excess Liability coverage in an amount of $10,000,000 excess of coverage specified in (A) above.

(C) All Risk Property coverage on a full replacement cost basis insuring all of the CLEC's real and personal property located on or within Company premises. The CLEC may also elect to purchase business interruption and contingent business interruption insurance, knowing that the Company has no liability for loss of profit or revenues should an interruption of service occur.

(D) Statutory Workers Compensation coverage.

(E) Employers Liability coverage in an amount of $500,000 each accident.

(F) Commercial Automobile Liability coverage insuring all owned, hired and non-owned automobiles.

Notwithstanding anything herein to the contrary. The coverage requirements described in (C) through (F) above shall only be required if the CLEC orders collocation services pursuant to this Tariff. The minimum amounts of insurance required in this section may be satisfied by the CLEC purchasing primary coverage in the amounts specified or by the CLEC buying a separate umbrella and/or excess policy together with lower limit primary underlying coverage. The structure of the coverage is at the CLEC's option, so long as the total amount of insurance meets the Company's requirements.

TARIFF BRANCH
RECEIVED
7/17/2006
PUBLIC SERVICE
COMMISSION
OF KENTUCKY

ISSUED: JULY 17, 2006
BY: Vice President
Lexington, Kentucky

EFFECTIVE: AUGUST 1, 2006

ACCESS SERVICE

19. COLLOCATION SERVICE (Cont'd)

19.7.2 Deductibles

Any deductibles, self-insured retentions (SIR), lost limits, retentions, etc. (collectively, "retentions") must be disclosed on a certificate of insurance provided to the Company, and the Company reserves the right to reject any such retentions in its reasonable discretion. All retentions shall be the responsibility of the CLEC.

19.7.3 Additional Insureds

The Company and its affiliates (which includes any corporation controlled by, controlling or in common control with the Company parent corporation), its respective directors, officers and employees shall be named as additional insureds under all General Liability and Umbrella/Excess Liability Policies obtained by the CLEC. Said endorsement shall provide that such additional insurance is primary insurance and shall not contribute with any insurance or self-insurance that the Company has secured to protect itself. All of the insurance afforded by the CLEC shall be primary in all respects, including the CLEC's Umbrella/Excess Liability insurance. The Company's insurance coverage shall be excess over any indemnification and insurance afforded by the CLEC and required hereby.

19.7.4 Waiver of Subrogation Rights

The CLEC waives and will require all of its insurers to waive all rights of subrogation against the Company (including the Company parent Corporation and any other affiliated and/or managed entity), its directors, officers and employees, agents or assigns, whether in contract, tort (including negligence and strict liability) or otherwise.

19.7.5 Evidence of Insurance

All insurance must be in effect on or before the Company authorizes access by CLEC employees or placement of CLEC equipment or facilities within the Company's premises and such insurance shall remain in force as long as the CLEC's facilities remain within any space governed by this Tariff. If the CLEC fails to maintain the coverage, the Company may pay the premiums and seek reimbursement from the CLEC. Failure to make a timely reimbursement will result in disconnection of service. The CLEC agrees to submit to the Company a certificate of insurance ACORD Form 25-S (1/95), or latest edition, such certificate to be signed by a duly authorized officer or agent of the Insurer, certifying that the minimum insurance coverages and conditions set forth herein are in effect, and that the Company will receive at least thirty (30) days notice of policy cancellation, expiration or non-renewal.

TARIFF BRANCH
RECEIVED
7/17/2006
PUBLIC SERVICE
COMMISSION
OF KENTUCKY

ISSUED: JULY 17, 2006
BY: Vice President
Lexington, Kentucky

EFFECTIVE: AUGUST 1, 2006

ACCESS SERVICE

19. COLLOCATION SERVICE (Cont'd)

19.7 Insurance (Cont'd)

19.7.5 Evidence of Insurance (Cont'd)

At least thirty (30) days prior to the expiration of the policy, the Company must be furnished satisfactory evidence that such policy has been or will be renewed or replaced by another policy. At the Company's request, the CLEC shall provide copies of the insurance provisions or endorsements as evidence that the required insurance has been procured, and that the Company has been named as an additional insured, prior to commencement of any service. In no event shall permitting CLEC access be construed as a waiver of the right of the Company to assert a claim against the CLEC for breach of the obligations established in this section.

19.7.6 Compliance Requirements

The CLEC shall require its contractors to comply with each of the provisions of this insurance section. This includes, but is not limited to, maintaining the minimum insurance coverages and limits, naming the Company (including the Company's parent corporation and any other affiliated and/or managed entity) as an additional insured under all liability insurance policies, and waiving all rights of subrogation against the Company (including the Company's parent Corporation and any other affiliated and/or managed entity), its directors, officers and employees, agents or assigns, whether in contract, tort (including negligence and strict liability) or otherwise. Prior to commencement of any work, the CLEC shall require and maintain certificates of insurance from each contractor evidencing the required coverages. At the Company's request, the CLEC shall supply to the Company copies of such certificates of insurance or require the contractors to provide insurance provisions or endorsements as evidence that the required insurance has been procured. The CLEC must also conform to the recommendation(s) made by the Company's fire insurance company, which the Company has already agreed to or shall hereafter agree to.

TARIFF BRANCH
RECEIVED
7/17/2006
PUBLIC SERVICE
COMMISSION
OF KENTUCKY

ISSUED: JULY 17, 2006
BY: Vice President
Lexington, Kentucky

EFFECTIVE: AUGUST 1, 2006

ACCESS SERVICE

19. COLLOCATION SERVICE (Cont'd)

19.8 Confidentiality

In addition to its other confidentiality obligations hereunder, the CLEC shall not use or disclose and shall hold in confidence all information of a competitive nature provided to it by the Company in connection with Collocation, or known to a CLEC as a result of its access to Company premises, or as a result of the interconnection of its equipment to Company facilities. Similarly, the Company shall not use or disclose and shall hold in confidence all information of a competitive nature provided to it by a CLEC in connection with Collocation, or known to the Company as a result of the interconnection of the CLEC's equipment to Company facilities. Such information is to be considered proprietary and shared within the Company and the CLEC on a need to know basis only. Neither the Company nor the CLEC shall be obligated to hold in confidence information that:

- Was already known to the CLEC free of any obligation to keep such information confidential;
- Was or becomes publicly available by other than unauthorized disclosure; or
- Was rightfully obtained from a third party not obligated to hold such information in confidence.

TARIFF BRANCH
RECEIVED
7/17/2006
PUBLIC SERVICE
COMMISSION
OF KENTUCKY

ISSUED: JULY 17, 2006
BY: Vice President
Lexington, Kentucky

EFFECTIVE: AUGUST 1, 2006

ACCESS SERVICE

19. COLLOCATION SERVICE (Cont'd)

19.9 Casualty

If the collocation equipment location in the Company premises is rendered wholly unusable through no fault of the CLEC, or if the building shall be so damaged that Company shall decide to demolish it, rebuild it, or abandon it for premises purposes (whether or not the demised premises are damaged in whole or in part), then, in any of such events, the Company may elect to terminate the collocation arrangements in the damaged building by providing written notification to CLECs as soon as practicable but no later than one hundred eighty (180) calendar days after such casualty, specifying a date for the termination of the Collocation arrangements. The termination date shall not be more than sixty (60) calendar days after the giving of such notice. Upon the date specified in such notice, the term of the collocation arrangement shall expire as fully and completely as if such date were the date set forth for the termination of the arrangement. CLECs shall immediately quit, surrender and vacate the premises without prejudice. Unless the Company serves a termination notice as provided for herein, it shall make the repairs and restorations with all reasonable expedition, subject to delays due to adjustment of insurance claims, labor troubles and causes beyond the Company's reasonable control. After any such casualty, CLECs shall cooperate with the Company's restoration by removing from the collocation space, as promptly as reasonably possible, all of their salvageable inventory and movable equipment, furniture and other property. The Company will work cooperatively with the CLECs to minimize any disruption to service, resulting from any damage. The Company shall provide written notification to CLECs detailing its plans to rebuild and will restore service as soon as practicable. In the event of termination, the Company's rights and remedies against CLECs in effect prior to such termination, and any fees owing, shall be paid up to such date. Any advance payments of fees made by CLECs for periods after such date, shall be returned.

TARIFF BRANCH
RECEIVED
7/17/2006
PUBLIC SERVICE
COMMISSION
OF KENTUCKY

ISSUED: JULY 17, 2006
BY: Vice President
Lexington, Kentucky

EFFECTIVE: AUGUST 1, 2006

ACCESS SERVICE

19. COLLOCATION SERVICE (Cont'd)

19.10 Termination of Service

19.10.1 Grounds for Termination

The Company's obligation to provide collocation is contingent upon the CLEC's compliance with the terms and conditions of this tariff and other applicable requirements of the collocation arrangement, including, without limitation, Company receipt of all applicable fees, rates, charges, application forms and required permits. Failure of the CLEC to make payments when due may result in termination of service. In addition to the other grounds for termination of collocation services set forth herein, the Company also reserves the right to terminate such services upon thirty (30) calendar days notice in the event the CLEC is not in conformance with Company standards and requirements, and/or imposes continued disruption and threat of harm to Company employees and/or network, or the Company's ability to provide service to other CLECs.

19.10.2 Effects of Termination

Upon the termination of collocation service, the CLEC shall disconnect and remove its equipment from the designated collocation space. The Company reserves the right to remove CLEC equipment if the CLEC fails to remove and dispose of the equipment within the thirty (30) calendar days of discontinuance. The CLEC will be charged the appropriate additional labor charge in 19.14 following for the removal of such equipment. Upon removal by the CLEC of all its equipment from the collocation space, it will reimburse the Company for the cost to restore the collocation space to its original condition at time of occupancy. The cost will be applied based on the additional labor charges rate set forth in 19.14 following. Upon termination of collocation services, the CLEC relinquishes all rights, title and ownership of cable to the Company.

19.11 Miscellaneous

The Company retains ownership of premises floor space, adjacent land and equipment used to provide all forms of collocation. The Company reserves for itself and its successors and assignees, the right to utilize the premises space in such a manner as will best enable it to fulfill its service requirements. The CLEC does not receive, as a result of entering into a collocation arrangement, any right, title or interest in Company wire center facility, the multiplexing node, multiplexing node enclosure, cable space, cable racking, vault space or conduit space other than as expressly provided herein. To the extent that a CLEC requires use of a Company local exchange line, it must order a business local exchange access line (B1). A CLEC may not use Company official lines.

TARIFF BRANCH
RECEIVED
7/17/2006
PUBLIC SERVICE
COMMISSION
OF KENTUCKY

ISSUED: JULY 17, 2006
BY: Vice President
Lexington, Kentucky

EFFECTIVE: AUGUST 1, 2006

ACCESS SERVICE

19. COLLOCATION SERVICE (Cont'd)

19.12 Rate Regulations

19.12.1 Rates and Charges

Except as otherwise described herein, the rates for Company collocation services provided pursuant to this tariff are set forth in 19.14 following. The tariffed rates herein may be superseded by rates contained in future regulatory orders or as otherwise required by legal requirements.

19.12.2 Billing and Payment

The initial payment of nonrecurring charges (NRCs) shall be due and payable in accordance with 19.4.1 preceding. The balance of the NRCs and all related monthly recurring service charges will be billed to the CLEC when the Company provides CLEC access to the caged, cageless or adjacent collocation arrangement and shall be payable in accordance with applicable established payment deadlines.

TARIFF BRANCH
RECEIVED
7/17/2006
PUBLIC SERVICE
COMMISSION
OF KENTUCKY

ISSUED: JULY 17, 2006
BY: Vice President
Lexington, Kentucky

EFFECTIVE: AUGUST 1, 2006

ACCESS SERVICE

19. COLLOCATION SERVICE (Cont'd)

19.13 Description and Application of Rate Elements

19.13.1 Non-Recurring Charges

The following are non-recurring charges (one-time charges) that apply for specific work activity.

(A) Engineering/Major Augment Fee

The Engineering/Major Augment Fee applies for each initial Caged and Cageless collocation request and major augment requests. This charge recovers the costs of the initial walkthrough to determine if there is sufficient space for Caged or Cageless collocation, the best location for the collocation area, what building modifications are necessary to provide collocation, and if sufficient DC power facilities exist in the premises to accommodate collocation. This fee also includes the total time for the Building Services Engineer and the time for the Outside Plant and Central Office Engineers to attend status meetings.

(B) Minor Augment Fee

The Minor Augment Fee applies for each minor augment request of an existing Cages or Cageless collocation arrangement that does not require additional AC or DC power systems, HVAC system upgrades, or additional cage space.

(C) Access Card Administration

The Access Card Administration rate covers activities associated with the issuance and management of premises access cards. The rate is applied on a per card basis.

(D) Cage Enclosure

The Cage Enclosure rate is applied per caged arrangement. This rate includes the labor and materials to recover the costs incurred in constructing the CLEC's cage, cage gate, and grounding bar. There are five caged enclosure rate elements based on the size of the cage: 25 to 100 square feet; 101 to 200 square feet; 201 to 300 square feet; 301 to 400 square feet; and 401 to 500 square feet.

(E) Cage Enclosure Augment

The Cage Enclosure Augment rate is applied per square foot of fencing when a CLEC requests additional fencing for an existing caged arrangement.

(F) BITS Timing

The non-recurring charge for BITS Timing includes engineering, materials, and labor costs to wire a BITS port to the CLEC's equipment. If requested, it is applied on a per project basis.

TARIFF BRANCH
RECEIVED
7/17/2006
PUBLIC SERVICE
COMMISSION
OF KENTUCKY

ISSUED: JULY 17, 2006
BY: Vice President
Lexington, Kentucky

EFFECTIVE: AUGUST 1, 2006

ACCESS SERVICE

19. COLLOCATION SERVICE (Cont'd)

19.13 Description and Application of Rate Elements (Cont'd)

19.13.1 Non-Recurring Charges (Cont'd)

(G) Overhead Superstructure

The Overhead Superstructure charge is applied for each initial caged and cageless collocation application. The Overhead Superstructure charge is designed to recover the Company's engineering, material, and installation costs for extending dedicated overhead superstructure.

(H) Facility Pull/Termination-Engineering

The Facility Pull/Termination-Engineering charge is applied per project to recover the engineering costs of pulling and terminating the interconnection wire (cable) from the collocation cage or relay rack to the Main Distribution Frame block or DSX panel.

(I) Facility Pull

The Facility Pull charge is applied per cable run and recovers the labor cost of pulling the interconnection wire (cable) from the collocation cage or relay rack to the Main Distribution Frame block or DSX panel.

(J) DSO Cable Termination

The DSO Cable Termination charge is applied per 100 pair DSO cable terminated and is designed to recover the labor cost of terminating DSO Cable from the collocation cage or relay rack to the Main Distribution Frame block or DSX panel.

(K) DS1 Cable Termination

The DS1 Cable Termination charge is applied per 28 pair DS1 cable terminated and is designed to recover the labor cost of terminating DS1 Cable from the collocation cage or relay rack to the DSX panel.

(L) DS3 Coaxial Cable Termination (Preconnectorized)

The DS3 Coaxial Cable Termination (Preconnectorized) charge is applied per termination to recover the labor cost of terminating preconnectorized DS3 Cable from the collocation cage or relay rack to the DSX panel.

TARIFF BRANCH
RECEIVED
7/17/2006
PUBLIC SERVICE
COMMISSION
OF KENTUCKY

ISSUED: JULY 17, 2006
BY: Vice President
Lexington, Kentucky

EFFECTIVE: AUGUST 1, 2006

ACCESS SERVICE

19. COLLOCATION SERVICE (Cont'd)

19.13 Description and Application of Rate Elements (Cont'd)

19.13.1 Non-Recurring Charges (Cont'd)

(M) DS3 Coaxial Cable Termination (Unconnectorized)

The DS3 Coaxial Cable Termination (Unconnectorized) charge is applied per termination to recover the labor cost of terminating preconnectorized DS3 Cable from the collocation cage or relay rack to the DSX panel.

(N) Fiber Cable Pull-Engineering

The Fiber Cable Pull-Engineering charge is applied per project to cover the engineering costs for pulling the CLEC's fiber cable, when necessary, into the Company's central office.

(O) Fiber Cable Pull-Place Innerduct

The Fiber Cable Pull-Place Innerduct charge is applied per linear foot to cover the cost of placing innerduct. Innerduct is the split plastic duct placed from the cable vault to the CLEC's equipment area through which the CLEC's fiber cable is pulled.

(P) Fiber Cable Pull-Labor

This charge is applied per linear foot and covers the labor costs of pulling the CLEC's fiber cable into the Company's central office.

(Q) Fiber Cable Pull-Fire Retardant

This charge is associated with the filling of space around cables extending through walls and between floors with a non-flammable material to prevent fire from spreading from one room or floor to another.

(R) Fiber Splice-Engineering

The Fiber Splice-Engineering charge is applied per project and covers the engineering costs for fiber cable splicing projects.

(S) Fiber Splice

The Fiber Splice charge is applied per fiber cable spliced and recovers the labor cost associated with the splicing.

TARIFF BRANCH
RECEIVED
7/17/2006
PUBLIC SERVICE
COMMISSION
OF KENTUCKY

ISSUED: April 27, 2007
BY: Vice President
Lexington, Kentucky

EFFECTIVE: May 12, 2007

ACCESS SERVICE

19. COLLOCATION SERVICE (Cont'd)

19.13 Description and Application of Rate Elements (Cont'd)

19.13.1 Non-Recurring Charges (Cont'd)

(T) DC Power

The DC Power Charge is applied per request for each caged and cageless collocation application. This recovers the Company's engineering, material and installation costs for providing and terminating DC power runs to the collocation area. (C)

(U) Cable Material Charges

The CLEC has the option of providing its own cable or the Company may, at the CLEC's request, provide the necessary transmission and power cables. If the Company provides these cables, the applicable Cable Material Charge will be applied on a per cable run basis.

(V) Adjacent Engineering Fee

The Adjacent Engineering Fee provides for the initial activities of the Central Office Equipment Engineer, Land & Building Engineer and the Outside Plant Engineer associated with determining the capabilities of providing Adjacent On-Site collocation. The labor charges are for an on-site visit, preliminary investigation of the manhole/conduit systems, wire center and property, and contacting other agencies that could impact the provisioning of adjacent collocation.

(W) Adjacent Fiber Cable Pull-Engineering

The Adjacent Fiber Cable Pull-Engineering fee provides for engineering associated with pulling the CLEC's fiber cable in an adjacent collocation arrangement. The Adjacent Fiber Cable Pull-Engineering charge includes the time incurred by the Outside Plant Engineer on the project to determine the conduit/ subduct assignment and associated outside plant activity to complete the work.

(X) Adjacent Fiber Cable Pull-Place Innerduct

This NRC covers the cost for placing innerduct, if required for adjacent collocation, which is the split plastic duct placed from the cable vault to the CLEC's equipment area through which the CLEC's fiber is pulled.

PUBLIC SERVICE COMMISSION
OF KENTUCKY
EFFECTIVE
5/12/2007
PURSUANT TO 807 KAR 5:011
SECTION 9 (1)

By _____
Executive Director

ISSUED: JULY 17, 2006
BY: Vice President
Lexington, Kentucky

EFFECTIVE: AUGUST 1, 2006

ACCESS SERVICE

19. COLLOCATION SERVICE (Cont'd)

19.13 Description and Application of Rate Elements (Cont'd)

19.13.1 Non-Recurring Charges (Cont'd)

(Y) Adjacent Fiber Cable Pull-Labor

This charge covers the labor costs for pulling CLEC fiber cable for an adjacent collocation arrangement. Refer to Adjacent Fiber Cable Pull-Engineering above.

(Z) Adjacent-Cable Fire Retardant

This charge is associated with the filling of space around cables extending through walls and between floors with a non-flammable material to prevent fire from spreading from one room or floor to another.

(AA) Adjacent Metallic Cable Pull-Engineering

This NRC covers the engineering costs of pulling metallic cable for Adjacent collocation into the Company wire center. For Adjacent collocation, the metallic cable will be spliced in the cable vault to a stubbed connector located on the vertical side of the main distribution frame to provide proper protection for central office equipment.

(AB) Adjacent Metallic Cable Pull-Labor

This charge covers the labor costs of pulling metallic cable for Adjacent collocation into the Company wire center.

(AC) Adjacent Cable Splice-Engineering

This charge covers the outside plant engineering costs for cable splice projects associated with an adjacent collocation arrangement.

(AD) Adjacent DS1/DS0 Cable Splice-Greater Than 200 Pair

This charge is for the labor to splice metallic cables and is based on a per pair spliced.

(AE) Adjacent DS1/DS0 Cable Splice-Less Than 200 Pair

This charge is for the labor to splice metallic cables and is based on a per pair spliced.

TARIFF BRANCH
RECEIVED
7/17/2006
PUBLIC SERVICE
COMMISSION
OF KENTUCKY

ISSUED: JULY 17, 2006
BY: Vice President
Lexington, Kentucky

EFFECTIVE: AUGUST 1, 2006

ACCESS SERVICE

19. COLLOCATION SERVICE (Cont'd)

19.13 Description and Application of Rate Elements (Cont'd)

19.13.1 Non-Recurring Charges (Cont'd)

(AF) Adjacent Fiber Cable Splice

This charge covers the labor to splice fiber cables and is based on a per fiber spliced.

(AG) Adjacent Facility Pull-Engineering

This charge covers the engineering cost associated with the interconnection wire (cable) from the main distribution frame connector to a termination block or DSX panel.

(AH) Adjacent Facility Pull-Labor

This charge covers the labor of running the interconnection wire (cable) from the main distribution frame connector to a termination block or DSX panel.

(AI) Adjacent DS0 Cable Termination (Connectorized)/Adjacent DS0 Cable Termination (Unconnectorized)

These charges cover the labor to terminate these types of interconnection wire (cable) for adjacent collocation to the main distribution frame block or DSX panel.

(AJ) Adjacent DS1 Cable Termination (Connectorized)/Adjacent DS1 Cable Termination (Unconnectorized)

These charges cover the labor of terminating these types of interconnection wire (cable) for adjacent collocation to the main distribution frame block or DSX panel.

(AK) Adjacent DS3 Coaxial Cable Termination (Preconnectorized) /Adjacent

These charges cover the labor of terminating this type of interconnection wire (cable) for adjacent collocation to the main distribution frame block or DSX panel.

(AL) Adjacent Fiber Cable Termination

This charge covers the labor of terminating fiber cable for adjacent collocation to the main distribution frame block or DSX panel.

TARIFF BRANCH
RECEIVED
7/17/2006
PUBLIC SERVICE
COMMISSION
OF KENTUCKY

ISSUED: JULY 17, 2006
BY: Vice President
Lexington, Kentucky

EFFECTIVE: AUGUST 1, 2006

ACCESS SERVICE

19. COLLOCATION SERVICE (Cont'd)

19.13 Description and Application of Rate Elements (Cont'd)

19.13.1 Non-Recurring Charges (Cont'd)

(AF) Adjacent Fiber Cable Splice

This charge covers the labor to splice fiber cables and is based on a per fiber spliced.

(AM) Collocation Space Report

When requested by a CLEC, the Company will submit a report that indicates the Company's available collocation space in a particular premises. The report will be issued within ten calendar days of the request. The report will specify the amount of collocation space available at each requested premises, the number of collocators and any modifications in the use of the space since the last report. The report will also include measures that the Company is taking to make additional space available for collocation.

(AN) Miscellaneous Services-Labor

Additional labor, if required by the CLEC to complete a collocation request will be rated as set forth in 19.14 following.

TARIFF BRANCH
RECEIVED
7/17/2006
PUBLIC SERVICE
COMMISSION
OF KENTUCKY

ISSUED: JULY 17, 2006
BY: Vice President
Lexington, Kentucky

EFFECTIVE: AUGUST 1, 2006

ACCESS SERVICE

19. COLLOCATION SERVICE (Cont'd)

19.13 Description and Application of Rate Elements (Cont'd)

19.13.2 Monthly Charges

The following are monthly charges. Monthly charges apply each month or fraction thereof that Collocation Service is provided.

(A) Caged Floor Space

Caged Floor Space is the cost per square foot to provide environmentally conditioned caged floor space to the CLEC. Environmentally conditioned space is that which has proper humidification and temperature controls to house telecommunications equipment. The cost includes only that which relates directly to the land and building space itself.

(B) Relay Rack Floor Space

The Relay Rack Floor Space charge provides for the environmentally conditioned floor space that a relay rack occupies based on linear feet. The standardized relay rack floor space depth is based on half the aisle area in front and back of the rack, and the depth of the equipment that will be placed within the rack.

(C) Cabinet Floor Space

The Cabinet Floor Space charge provides for the environmentally conditioned floor space that a telecommunications equipment cabinet occupies based on linear feet. The standardized floor space depth is based on the size of the cabinet and half of the aisle in the front and rear of the cabinet. The cabinet size is based on the Company's standard cabinet size of 33 inches by 29 inches.

(D) Cable Subduct Space-Manhole

This charge applies per project per month and covers the cost of the space that the outside plant fiber occupies within the manhole.

(E) Cable Subduct Space

The Subduct Space charge covers the cost of the subduct space that the outside plant fiber occupies and applies on a per linear foot basis.

(F) Fiber Cable Vault Splice

The Fiber Cable Vault Splice charge applies per subduct or per splice and covers the space and material cost associated with the CLEC's fiber cable splice within the Company's cable vault.

(G) Cable Rack Space-Metallic

The Cable Rack Space-Metallic charge is applied for each DSO, DS1 and DS3 cable run. The charge is designed to recover the space utilization cost that the CLEC's metallic and coaxial cable occupies within the Company's cable rack system.

TARIFF BRANCH
RECEIVED
7/17/2006
PUBLIC SERVICE
COMMISSION
OF KENTUCKY

ISSUED: April 27, 2007
BY: Vice President
Lexington, Kentucky

EFFECTIVE: May 12, 2007

ACCESS SERVICE

19. COLLOCATION SERVICE (Cont'd)

19.13 Description and Application of Rate Elements (Cont'd)

19.13.2 Monthly Charges (Cont'd)

(H) Cable Rack Space-Fiber

The Cable Rack Space-Fiber charge recovers the space utilization cost that the CLEC's fiber cable occupies within the Company's cable rack system.

(I) DC Power

The DC Power monthly charge is applied on a per 40 amp basis to a Zone 1 Office and on a per 5 amp (C)
basis to Zone 2 and 3 offices. This charge is designed to recover the monthly facility and utility expense (C)
to power the collocation equipment.

(J) Facility Termination (DS0)

This charge is applied per 100 pair cable terminated. This charge is designed to recover the labor and material cost of the main distribution frame 100 pair circuit block.

(K) Facility Termination (DS1)

The Facility Termination (DS1) charge is applied per 28 pair DS1 cable terminated. This charge is designed to recover the labor and material cost of the DSX facility termination panel.

(L) Facility Termination (DS3)

The Facility Termination (DS3) charge is applied per DS3 cable terminated. This charge recovers the labor and material cost of the DSX facility termination panel.

(M) BITS Timing

The BITS Timing monthly charge is designed to recover equipment and installation cost to provide synchronized timing for electronic communications equipment. This rate is based on a per port cost.

(N) Building Modification

The Building Modification monthly charge is applied to each caged and cageless arrangement and is associated with provisioning the following items in the Company's premises: security, dust partition, ventilation ducts, demolition/site work, lighting, outlets and grounding equipment.

PUBLIC SERVICE COMMISSION
OF KENTUCKY
EFFECTIVE
5/12/2007
PURSUANT TO 807 KAR 5:011
SECTION 9 (1)

By _____
Executive Director

ISSUED: April 27, 2007
BY: Vice President
Lexington, Kentucky

EFFECTIVE: May 12, 2007

ACCESS SERVICE

19. COLLOCATION SERVICE (Cont'd)

19.13 Description and Application of Rate Elements (Cont'd)

19.13.2 Monthly Charges (Cont'd)

(O) Environmental Conditioning

The Environmental Conditioning charge is applied to each caged and cageless arrangement on a per 40 amp increment to a Zone 1 Office and on a per 5 amp increment to Zone 2 and 3 offices based on the CLEC's DC Power requirements. This charge is associated with the provisioning of heating, ventilation, and air conditioning systems for the CLEC's equipment in the Company's premises. (C)

(P) Adjacent Cable Subduct Space-Manhole

This charge covers the space utilization cost that the outside plant fiber or metallic cable occupies within the manhole.

(Q) Adjacent Cable Subduct Space

The Adjacent Cable Subduct Space charge covers the space utilization cost of the subduct that the outside plant fiber or metallic cable occupies within the conduit system.

(R) Adjacent Conduit Space (Metallic)-Manhole

This charge covers the space utilization cost that the outside plant metallic cable occupies within the manhole.

(S) Adjacent Conduit Space (Metallic)

This charge covers the space utilization cost that the outside plant metallic cable occupies within the conduit system.

(T) Adjacent Facility Termination DS0 Cable

This charge is applied per 100 pair cable terminated. This charge is designed to recover the labor and material cost of the main distribution frame 100 pair circuit block.

(U) Adjacent Facility Termination DS1 Cable

The Facility Termination (DS1) charge is applied per 28 pair DS1 cable terminated. This charge is designed to recover the labor and material cost of the DSX facility termination panel.

PUBLIC SERVICE COMMISSION
OF KENTUCKY
EFFECTIVE
5/12/2007
PURSUANT TO 807 KAR 5:011
SECTION 9 (1)

By _____
Executive Director

ISSUED: JULY 17, 2006
BY: Vice President
Lexington, Kentucky

EFFECTIVE: AUGUST 1, 2006

ACCESS SERVICE

19. COLLOCATION SERVICE (Cont'd)

19.13 Description and Application of Rate Elements (Cont'd)

19.13.2 Monthly Charges (Cont'd)

(V) Adjacent Facility Termination DS3 Cable

The Facility Termination (DS3) charge is applied per DS3 cable terminated. This charge recovers the labor and material cost of the DSX facility termination panel.

(W) Adjacent Cable Vault Space

The Adjacent Cable Vault Space charge covers the cost of the space the CLEC's cable occupies within the cable vault. The charge is based on the diameter of the cable or subduct.

(X) Adjacent Cable Rack Space

This charge covers the space utilization cost that the CLEC's fiber, metallic or coaxial cable occupies within the cable rack system. The charge is based on the linear feet occupied.

TARIFF BRANCH
RECEIVED
7/17/2006
PUBLIC SERVICE
COMMISSION
OF KENTUCKY

ISSUED: April 27, 2007
BY: Vice President
Lexington, Kentucky

EFFECTIVE: May 12, 2007

ACCESS SERVICE

19. COLLOCATION SERVICE (Cont'd)

19.13 Description and Application of Rate Elements (Cont'd)

19.13.3 Zone Specification (N)

The table below specifies each exchange as either Zone 1, Zone 2, or Zone 3.

Exchange	Zone 1	Zone 2	Zone 3
Augusta	X		
Arlington		X	
Barbourville		X	
Bardwell	X		
Brodhead		X	
Brooksville			X
Brownsville			X
Calvert City	X		
Caneyville			X
Clarkson			X
Columbus		X	
Cumberland		X	
Dover	X		
Eubank		X	
Evarts		X	
Faubush			X
Fernleaf			X
Flat Lick		X	
Germantown		X	
Irvine		X	
Jenkins		X	
Johnsville			X
Livingston			X
London	X		
Mammoth Cave			X
Manchester		X	
Milburn			X
Mount Olivet			X
Mount Vernon		X	
Oneida			X
Park City			X
Science Hill		X	
Shopville			X
Smithland			X
Smiths Grove			X
Uniontown	X		
Washington		X	
White Lily			X

(N)

PUBLIC SERVICE COMMISSION
OF KENTUCKY
EFFECTIVE
5/12/2007
PURSUANT TO 807 KAR 5:011
SECTION 9 (1)

By _____
Executive Director

ISSUED: JULY 17, 2006
BY: Vice President
Lexington, Kentucky

EFFECTIVE: AUGUST 1, 2006

ACCESS SERVICE

19. COLLOCATION SERVICE (Cont'd)

19.14 Rates and Charges

		NRC	MONTHLY CHARGE
19.14.1	Engineering/Major Augment Fee, Per Occurrence	$ 1,129.00	--
19.14.2	Minor Augment Fee, Per Occurrence	200.00	--
19.14.3	Access Card Administration, Per Card	21.00	--
19.14.4	Cage Enclosure		
	25-100 Sq.Ft. Cage	5,142.00	--
	101-200 Sq.Ft. Cage	5,916.00	--
	201-300 Sq.Ft. Cage	7,307.00	--
	301-400 Sq.Ft. Cage	8,699.00	--
	401-500 Sq.Ft. Cage	10,090.00	--
19.14.5	Cage Enclosure Augment		
	Per Sq.Ft. Fencing	14.00	--
19.14.6	BITS Timing,		
	Per Project	307.00	--
	Per Month	--	$13.00
19.14.7	Overhead Superstructure, Per Project	2,497.00	--
19.14.8	Facility Pull/Termination-Engineering, Per Project	79.00	--
19.14.9	Facility Pull, Per Cable Run	225.00	--

TARIFF BRANCH
RECEIVED
7/17/2006
PUBLIC SERVICE
COMMISSION
OF KENTUCKY

ISSUED: April 27, 2007
BY: Vice President
Lexington, Kentucky

EFFECTIVE: May 12, 2007

ACCESS SERVICE

19. COLLOCATION SERVICE (Cont'd)

19.14 Rates and Charges (Cont'd)

		NRC	MONTHLY CHARGE	
19.14.10	Cable Termination			
	DSO Cable, per 100 pair cable terminated	$ 5.00	--	
	DS1 Cable, per 28 pair cable terminated	2.00	--	
	DS3 Coaxial Cable (Preconnectorized) per cable terminated	2.00	--	
	DS3 Coaxial Cable (Unconnectorized) per cable terminated	12.00	--	
19.14.11	Fiber Cable Pull-Engineering			
	Per Project	607.00	--	
19.14.12	Fiber Cable Pull-Place Innerduct			
	Per Linear Foot	2.00	--	
19.14.13	Fiber Cable Pull-Labor			
	Per Linear Foot	2.00	--	
19.14.14	Fiber Cable Pull-Cable Fire Retardant			
	Per Occurrence	45.00	--	
19.14.15	Fiber Splice-Engineering			
	Per Project	31.00	--	
19.14.16	Fiber Cable Splice			
	Per Fiber	62.00	--	
19.14.17	DC Power,			(C)
	Per Project	2,905.00	--	
	Zone 1 - Per 40 Amps per Month	--	$643.00	(C)
	Zone 2 - Per 5 Amps per Month		$ 80.50	(N)
	Zone 3 – Per 5 Amps per Month		$ 80.50	(N)

PUBLIC SERVICE COMMISSION
OF KENTUCKY
EFFECTIVE
5/12/2007
PURSUANT TO 807 KAR 5:011
SECTION 9 (1)

By _____
Executive Director

ISSUED: JULY 17, 2006
BY: Vice President
Lexington, Kentucky

EFFECTIVE: AUGUST 1, 2006

ACCESS SERVICE

19. COLLOCATION SERVICE (Cont'd)

19.14 Rates and Charges (Cont'd)

		NRC	MONTHLY CHARGE
19.14.18	Cable Material Charge, Per Cable Run		
	Facility Cable		
	DSO Cable (Connectorized)		
	100 Pair	$327.00	--
	DS1 Cable (Connectorized)	303.00	--
	DS3 Coaxial Cable	82.00	--
	Shielded Cable (Orange Jacket)	34.00	--
	Power Cable		
	Wire Power 1/0	92.00	--
	Wire Power 2/0	134.00	--
	Wire Power 3/0	148.00	--
	Wire Power 4/0	182.00	--
	Wire Power 350 MCM	309.00	--
	Wire Power 500 MCM	432.00	--
	Wire Power 750 MCM	664.00	--
19.14.19	Caged Floor Space, Per Square Foot, Per Month	--	$5.00
19.14.20	Relay Rack Floor Space, Per Linear Foot, Per Month	--	19.00
19.14.21	Cabinet Floor Space, Per Linear Foot, Per Month	--	25.00
19.14.22	Cable Subduct Space-Manhole Per Project, Per Month	--	10.00

TARIFF BRANCH
RECEIVED
7/17/2006
PUBLIC SERVICE
COMMISSION
OF KENTUCKY

ISSUED: April 27, 2007
BY: Vice President
Lexington, Kentucky

EFFECTIVE: May 12, 2007

ACCESS SERVICE

19. COLLOCATION SERVICE (Cont'd)

19.14 Rates and Charges (Cont'd)

		NRC	MONTHLY CHARGE	
19.14.23	Cable Subduct Space			
	Per Linear Foot, Per Month	--	$ .06	
19.14.24	Fiber Cable Vault Splice-48 Fiber			
	Material, Per Splice, Per Month	--	11.00	
19.14.25	**Fiber Cable Vault Splice-48 Fiber**			
	Per Subduct, Per Month	--	2.00	
19.14.26	**Fiber Cable Vault Splice-96 Fiber**			
	Material, Per Splice, Per Month	--	31.00	
19.14.27	**Fiber Cable Vault Splice-96 Fiber**			
	Per Subduct, Per Month	--	2.00	
19.14.28	**Cable Rack Space-Metallic**			
	Per Cable Run, Per Month	--	3.00	
19.14.29	**Cable Rack Space-Fiber**			
	Per Innerduct Foot, Per Month	--	.02	
19.14.30	**Facility Termination**			
	DSO, Per 100 Pair, Per Month	--	5.00	
	DS1, Per 28 Pair, Per Month	--	18.00	
	DS3, Per DS3, Per Month	--	13.00	
19.14.31	**Building Modification**			
	Per Project	--	220.00	
19.14.32	**Environmental Conditioning**			
	Zone 1 - Per 40 Amps per Month	--	104.00	(C)
	Zone 2 - Per 5 Amps per Month		13.00	(N)
	Zone 3 - Per 5 Amps per Month		13.00	(N)
19.14.33	**Adjacent Engineering Fee**			
	On-Site, Per Occurrence	$958.00	--	

PUBLIC SERVICE COMMISSION
OF KENTUCKY
EFFECTIVE
5/12/2007
PURSUANT TO 807 KAR 5:011
SECTION 9 (1)

By _____
Executive Director

ISSUED: JULY 17, 2006
BY: Vice President
Lexington, Kentucky

EFFECTIVE: AUGUST 1, 2006

ACCESS SERVICE

19. COLLOCATION SERVICE (Cont'd)

19.14 Rates and Charges (Cont'd)

		NRC	MONTHLY CHARGE
19.14.34	Adjacent Fiber Cable Pull-Engineering, Per Project	$607.00	--
19.14.35	Adjacent Fiber Cable Pull-Place Innerduct, Per Linear Foot	2.00	--
19.14.36	Adjacent Fiber Cable Pull Per Linear Foot	2.00	--
19.14.37	Adjacent Cable Fire Retardant Per Occurrence	45.00	--
19.14.38	Adjacent Metallic Cable Pull-Engineering, Per Project	607.00	--
19.14.39	Adjacent Metallic Cable Pull Per Linear Foot	2.00	--
19.14.40	Adjacent Metallic Cable Splice Engineering, Per Project	31.00	--
	Greater than 200 Pair, Per DSO/DS1 Pair	2.00	--
	200 Pair or Less, Per DSO/DS1 Pair	2.00	--
19.14.41	Adjacent Fiber Cable Splice Engineering, Per Fiber	31.00	--
	48 Fiber or Less, Per Fiber	62.00	--
	Greater than 48 Fiber, Per Fiber	51.00	--
19.14.42	Adjacent Facility Pull-Engineering Per Project	79.00	--

TARIFF BRANCH
RECEIVED
7/17/2006
PUBLIC SERVICE
COMMISSION
OF KENTUCKY

ISSUED: JULY 17, 2006
BY: Vice President
Lexington, Kentucky

EFFECTIVE: AUGUST 1, 2006

ACCESS SERVICE

19. COLLOCATION SERVICE (Cont'd)

19.14 Rates and Charges (Cont'd)

		NRC	MONTHLY CHARGE
19.14.43	Adjacent Facility Pull		
	Per Linear Foot	$ 2.00	--
19.14.44	Adjacent Cable Termination		
	DSO Cable (Connectorized)		
	Per 100 Pair	5.00	--
	DSO Cable (Unconnectorized)		
	Per 100 Pair	45.00	--
	DS1 Cable (Connectorized)		
	Per 28 Pair	2.00	--
	DS1 Cable (Unconnectorized)		
	Per 28 Pair	34.00	--
	DS3 Coaxial Cable (Preconnectorized)		
	Per DS3	2.00	--
	DS3 Cable (Unconnectorized)		
	Per DS3	12.00	--
	Fiber Cable, Per Fiber Termination	62.00	--
19.14.45	Adjacent Subduct Space		
	Manhole, Per Project	--	$10.00
	Per Linear Foot	--	0.06
19.14.46	Adjacent Conduit Space (4" Duct)		
	Manhole, Metallic, Per Conduit	--	17.00
	Metallic, Per Linear Foot	--	0.06
19.14.47	Adjacent Facility Termination-Material		
	DSO Cable, Per 100 Pair	--	5.00
	DS1 Cable, Per 28 Pair	--	18.00
	DS3 Cable, Per Coaxial	--	13.00

TARIFF BRANCH
RECEIVED
7/17/2006
PUBLIC SERVICE
COMMISSION
OF KENTUCKY

ISSUED: JULY 17, 2006
BY: Vice President
Lexington, Kentucky

EFFECTIVE: AUGUST 1, 2006

ACCESS SERVICE

19. COLLOCATION SERVICE (Cont'd)

19.14 Rates and Charges (Cont'd)

		NRC	MONTHLY CHARGE
19.14.48	Adjacent Cable Vault Space		
	Per 1200 Pair, Material, Per Splice	--	$556.00
	Per 1200 Pair, Per Cable	--	4.00
	Per 900 Pair, Material, Per Splice	--	407.00
	Per 900 Pair, Per Cable	--	4.00
	Per 600 Pair, Material, Per Splice	--	271.00
	Per 600 Pair, Per Cable	--	3.00
	Per 100 Pair, Material, Per Splice	--	56.00
	Per 100 Pair, Per Cable	--	1.00
	Per 48 Fiber, Material, Per Splice	--	11.00
	Per 48 Fiber, Per Subduct	--	2.00
	Per 96 Fiber, Material, Per Splice	--	31.00
	Per 96 Fiber, Per Subduct	--	2.00
19.14.49	Adjacent Cable Rack Space		
	Metallic DSO, Per Linear Foot	--	0.02
	Metallic DS1, Per Linear Foot	--	0.01
	Fiber, Per Innerduct Foot	--	0.02
	Coaxial, Per Linear Foot	--	0.01
19.14.50	Collocation Space Report-Per Wire		
	Center or Access Tandem Requested	$1,218.00	--
19.14.51	Labor Rates, Per Technician		
	Basic Business Day		
	1st Half Hour	40.10	--
	Each Additional Half Hour	20.05	--
	Overtime Non-Business Day		
	1st Half Hour	100.00	--
	Each Additional Half Hour	75.00	--
	Premium Non-Business Day		
	1st Half Hour	150.00	--
	Each Additional Half Hour	125.00	--

TARIFF BRANCH
RECEIVED
7/17/2006
PUBLIC SERVICE
COMMISSION
OF KENTUCKY